EFFECTIVE SERIAL NO. 360730-039-FF-05-94

OWNERS MANUAL

5005H

REVISION 10/94

PART NO. 999937

SERIAL NO. _____

AUTO CRANE COMPANY

PO BOX 580697, TULSA, OK 74158-0697

4707 N. MINGO ROAD, TULSA, OK 74117

PHONE (918) 836-0463, TELEX 158108 RAMSEY TUL

SALES FAX (918) 438-6688 SERVICE FAX (918) 834-5979

WARNINGS

READ THIS PAGE!

- **WARNING! Federal law (49 cfr part 571) requires that the Final Stage Manufacturer of a vehicle certify that the vehicle complies with all applicable federal regulations. Any modifications performed on the vehicle prior to the final stage are also considered intermediate stage manufacturing and must be certified as to compliance. The installer of this crane and body is considered one of the manufacturers of the vehicle. As such a manufacturer, the installer is responsible for compliance with all applicable federal and state regulations, and is required to certify that the vehicle is in compliance.**

- **WARNING! It is the further responsibility of the installer to comply with the OSHA Truck Crane Stability Requirements as specified by 29 CFR part 1910.180 (C) (1).**

- **WARNING! NEVER OPERATE THE CRANE NEAR ELECTRICAL POWER LINES!** Auto Crane Company recommends that a crane never be moved any closer than 10 feet (3.05m) from power lines at any point. SEE DANGER DECAL (P/N 040529) in this Owner's Manual.

- **WARNING! NEVER .....**
  - **EXCEED** load chart capacities (centerline of rotation to hoist hook).
  - un-reel last 5 wraps of cable from drum!
  - wrap cable around load!
  - attempt to lift or drag a load from the side! The boom can fail far below its' rated capacity.
  - weld, modify, or use unauthorized components on any Auto Crane unit! This will void any warranty or liability. Also failure of the crane may result.
  - place a chain link on the tip of the hook and try to lift a load!
  - use a sling bar or anything larger than the hook throat that could prevent the hook latch from closing, thus negating the safety feature!
  - hold on any pendant Select Switch that will cause unsafe operating conditions!

- **WARNING!** In using a hook with latch, **ALWAYS** make sure that the hook throat is closed before lifting a load! Proper attention and common sense applied to the use of the hoist hook and various slings will prevent possible damage to material being hoisted and may prevent injury to personnel.

- **WARNING!** Failure to correctly plumb and wire crane can cause inadvertent operation and damage to crane and/or personnel!

- **WARNING!** Auto Crane Company remote controlled, stiff boom cranes are not designed or intended to be used for any applications involving the lifting or moving of personnel.

- **WARNING! ALWAYS** operate the crane in compliance with the load capacity chart. **Do not use** the overload shutdown device to determine maximum rated loads, if your crane is equipped with this type of device.

TABLE OF CONTENTS

1	INTRODUCTION	1-1.0.0
2	SAFETY TIPS AND PRECAUTIONS	1-2.0.0
3	OPERATION OF UNIT / OUTRIGGERS	1-3.0.0
4	QUALIFICATIONS FOR AND CONDUCT OF OPERATORS	1-4.0.0
5	INSPECTION, TESTING & MAINTENANCE	1-5.0.0
6	MOUNTING AND INSTALLATION	2-1.0.0
7	CRANE ORIENTATION AND HYDRAULIC HOOKUP	2-2.0.0
8	SAFETY DECAL SECTION	2-3.0.0
9	GENERAL DIMENSIONS	2-4.0.0
10	AMPLIFIER SETUP PROCEDURE	2-5.0.0
11	OPTIMETER TROUBLESHOOTING	2-7.0.0
12	HYDRAULIC VALVES, TROUBLESHOOTING	3-1.0.0
13	WIRE LINE MAINTENANCE	3-4.0.0
14	LUBRICATION & MAINTENANCE SCHEDULE	3-5.0.0
15	GENERAL ASSEMBLY (PEDESTAL)	4-1.0.0
16	BOOM ASSEMBLY	4-4.0.0
17	TWO-BLOCK ASSEMBLY	4-5.0.0
18	AUTOMATIC SAFETY BRAKE	4-7.0.0
19	ROTATION GEAR BOX	4-8.0.0
20	HOIST ACTUATOR	4-10.0.0
21	ELECTRICAL SECTION	5-1.0.0
22	HYDRAULIC SECTION	6-1.0.0

TABLE OF CONTENTS

23 RESERVOIR ASSEMBLY 6-9.0.0

24 OUTRIGGERS 7-1.0.0

25 MISCELLANEOUS 8-1.0.0

26 LOAD CHART 9-9.9.9

27 WARRANTY ..... LAST PAGE

INTRODUCTION
5005H SERIES

Auto Crane products are designed to provide many years of safe, trouble-free, dependable service when properly used and maintained.

To assist you in obtaining the best service from your crane and to avoid untimely crane and/or vehicle failure, this manual provides the following operating and service instructions. It is **specifically recommended** that all operating and service personnel consider this manual as mandatory material for reading and study before operating or servicing Auto crane products. It is **highly recommended** that crane owners, equipment managers and supervisors also read this manual.

Auto Crane has incorporated several safety features in the 5005H series cranes for your protection. The choice of materials and the design of the electrical system minimizes weight and lengthens durability. The hydraulic components meet or exceed a **3.5:1 safety factor**. Holding valves prevent the load from dropping if a hose should fail. A **10u filter** in the return line of the hydraulic system removes dirt and grit that may cause erratic operation. The reservoir has a **15u air filter** in the filler cap. The pump has a **40 mesh strainer** in the suction line.

For your convenience the overall dimensions of the 5005H series crane are on the General Dimension Drawing. Maximum turning radius at both the hoist motor and the rotation motor are also on that drawing.

Remember, the crane adds weight to the vehicle. Adding weight may change the driving and riding characteristics of the vehicle unless the appropriate overload spring(s) are installed on the truck. The payload of the vehicle is reduced by the weight of the crane. The operator should exercise care when loading the vehicle. Distributing the payload on the vehicle evenly will greatly improve the driving and riding characteristics of the vehicle. **A minimum G.V.W. of 10,500 lbs. is recommended for mounting the 5005H series cranes.**

Auto Crane Company issues a limited warranty certificate with each unit sold. See last page for warranty policy.

It has always been Auto Crane Company policy to handle all warranty claims we receive as promptly as possible. If a warranty claim involves discrepant material or workmanship, Auto Crane will take immediate corrective action. It is understandable that Auto Crane company cannot assume responsibility of liability when it is obvious that our products have been abused, mis-used, overloaded or otherwise damaged by inexperienced persons trying to operate the equipment without reading the manual.

Auto Crane will not assume responsibility or liability for any modifications or changes made to unit, or installation of component parts done without authorization.

Auto Crane maintains a strong distributor network and a knowledgeable Customer Service Department. In most cases, an equipment problem is solved via phone conversation with our customer service department. The customer service department also has the ability to bring a local distributor, a regional sales manager, or a factory serviceman into the solution of an equipment problem. If, through no fault of Auto crane company, it is necessary to send an experienced factory serviceman on a field service call, the rates stated in the Auto Crane Distributor's Flat Rate Manual will apply.

Auto Crane Company's extensive Research and Development Program allow our customers to use the best equipment on the market. Our Engineering Staff and our knowledgeable sales people, are always available to our customers in solving crane and winch-type application problems. When in doubt, call the Auto Crane factory.

DISTRIBUTOR ASSISTANCE:

Should you require any assistance not given in this manual, we recommend that you consult your nearest Auto Crane Distributor. Our distributors sell authorized parts and have service departments that can solve almost any needed repair.

NOTE: *THIS MANUAL SHOULD REMAIN WITH THE CRANE* ***AT ALL TIMES.***

This manual does not cover all maintenance, operating, or repair instructions pertinent to all possible situations. If you require additional information, please contact the **Auto Crane Company** at the following telephone number: **(918) 438-2760**. The information contained in the manual is in effect at the time of this printing. Auto Crane Company reserves the right to update this material without notice or obligation.

--- IMPORTANT ---
OPERATION OF UNIT

1. Make sure this manual has been thoroughly read by all crane operating personnel and supervisors.
2. A routine inspection of the crane should be mandatory before each operating day. Any defects should be corrected immediately.
3. At a job site the vehicle should be positioned so that the crane can adequately reach the load within the rated capacity (centerline of rotation to hoist hook).
4. Keep the vehicle as level as possible during operation.
5. For electric cranes, **engage emergency brake** and leave ignition on with transmission in neutral (or in park for automatic transmissions). Activate any crane power switches. For Auto Crane units requiring battery and hydraulic operation, **engage emergency brake,** place gear selector in neutral, press clutch, activate PTO, release clutch and after hydraulic fluid is warm, set throttle control to proper engine speed.
6. Always use outriggers from the truck to the ground. Be sure these are firm and adequately positioned. When rotating, **keep load as low to the ground as possible.**
7. Remove pendant control from cab or storage area. On smaller units, plug pendant into receptacle on crane. On larger units, remove pendant control from guard and unwrap cable from boom. Do not operate crane until cable is unwound completely. On all cranes, detach hook from dead man. Crane is now ready for operation.
8. Always boom up before rotating so the boom will clear the required boom support.
9. When extending the boom, always maintain clearance between the boom crown and the traveling block or hoist hook.
10. Always observe safe and practical operation to avoid possible accidents. Refer to Safety Tips and Precautions.
11. After completing lifting operations, return the boom to stowed position on the boom support. Avoid unneeded pressure on the boom support.
12. Store pendant control on proper location (in cab or on crane).
13. Return outriggers to stowed position. Make sure they are pinned in place or jacklegs are returned to compartment.
14. Check work area for any tools or equipment not stored.
15. Release throttle control, depress clutch and disengage PTO. Deactivate any crane power switches
16. Report any unusual occurrence during crane operation that may indicate required maintenance or repair.
17. NEVER use two cranes to support a load too large for either crane.
18. Spray all electrical equipment with special corrosion resistant coating. This eliminates rust or corrosion due to melting and freezing action of condensation.

OPERATION OF OUTRIGGERS

Prior to operating outriggers, detach crane hook from dead man.

For hydraulic outriggers:

1. Shift crane/outrigger selector valve to "outrigger" position.
2. While operating the outrigger control valves (located on the outrigger cylinders), simultaneously operate the boom-up control switch. This will allow the hydraulic system to build pressure.
3. After outriggers are positioned, return crane/outrigger selector valve to "crane" position.
4. Crane is now ready to operate.

For manual outriggers:

1. Pull lock pins to release jack leg or drop down outrigger and move to outermost lock position.
2. Make sure lock pins are reinstalled properly.
3. Lower outrigger pad to firm ground and adjust foot to take out slack.
4. Crane is now ready to operate.

--- *IMPORTANT* ---
SAFETY TIPS AND PRECAUTIONS

1. Make certain the vehicle meets minimum chassis requirements. (These requirements do not guarantee unit stability)
2. Make certain the crane is installed per factory specifications. Contact your local Distributor or the Auto Crane factory if any questions arise.
3. Keep the vehicle in as level a position as possible while loading or unloading.
4. **ALWAYS** set the vehicle emergency brake before beginning crane operations.
5. **ALWAYS** use outriggers from vehicle to the ground during crane operation. Make sure they are firmly positioned on solid footings.
6. All load ratings are based on crane capacity, **NOT** truck/crane stability.
7. Keep objects and personnel clear of crane path during operation.
8. Keep hoist cable pulled tight at all times.
9. **REMEMBER**, in lifting a heavy load, the weight can create enough tipping moment to overturn the vehicle.
10. **ALWAYS** keep load as close to ground as possible.
11. Oil gears as required.
12. Periodic adjustment of hoist worm brake may be required (see automatic safety brake drawing in this manual).
13. Hydraulic hoses need to be inspected frequently for signs of deterioration, and be replaced as required.
14. The hoist hook is an important item that an operator should consider and use properly. It should be checked on a daily basis for distortion or cracks.
15. **ALWAYS** store outriggers before road travel.
16. **NEVER OPERATE THE CRANE NEAR ELECTRICAL POWER LINES!** Auto Crane Company recommends that a crane never be moved any closer than 10 feet (3.05m) from power lines at any point. SEE DANGER DECAL (P/N 040529) in this Owner's Manual.
17. **NEVER** un-reel last 5 wraps of cable from drum!
18. **NEVER** wrap cable around load!
19. **NEVER** attempt to lift or drag a load from the side! The boom can fail far below its' rated capacity.
20. **NEVER** weld, modify, or use unauthorized components on any Auto Crane unit! This will void any warranty or liability. Also failure of the crane may result.
21. **NEVER** place a chain link on the tip of the hook and try to lift a load!
22. **NEVER** use a sling bar or anything larger than the hook throat that could prevent the hook latch from closing, thus negating the safety feature!
23. In using a hook with latch, **ALWAYS** insure that the hook throat is closed before lifting a load! Proper attention and common sense applied to the use of the hoist hook and various slings will prevent possible damage to material being hoisted and may prevent injury to personnel.
24. **NEVER** hold any pendant Select Switch on that will cause unsafe operating conditions!
25. **NEVER EXCEED** load chart capacities (centerline of rotation to hoist hook).

QUALIFICATIONS FOR AND CONDUCT OF OPERATORS AND OPERATING PRACTICES

OPERATORS

1 Crane operation shall be limited to personnel with the following minimum qualifications:

A. designated persons

B. trainees under the direct supervision of a designated person

C. maintenance and test personnel (when it is necessary in the performance of their duties)

D. inspectors (crane).

2 No one other than the personnel specified above shall enter the operating area of a crane with the exception of persons such as oilers, supervisors, and those specified persons authorized by supervisors whose duties require them to do so and then only in the performance of their duties and with the knowledge of the operator or other persons.

QUALIFICATIONS FOR OPERATORS

3 Operators shall be required by the employer to pass a practical operating examination. Qualifications shall be limited to the specific type of equipment for which examined.

4 Operators and operator trainees shall meet the following physical qualifications:

A. Vision of at least 20/30 snellen in one eye and 20/50 in the other, with or without corrective lenses.

B. Ability to distinguish colors, regardless of position, if colors differentiation is required for operation.

C. Adequate hearing with or without hearing aid for the specific operation.

5 Evidence of physical defects or emotional instability which render a hazard to operator or others, which in the opinion of the examiner could interfere with the operator's performance may be sufficient cause for disqualification. In such cases, specialized clinical or medical judgement and tests may be required.

6 Evidence that the operator is subject to seizures or loss of physical control shall be sufficient reason for disqualification. Specialized medical tests may be required to determine these conditions.

7 Operators and operator trainees should have normal depth perception, coordination, and no tendencies to dizziness or similar undesirable characteristics.

8 In addition to the above listed requirements, the operator shall:

A. Demonstrate the ability to comprehend and interpret all labels, operator's manuals, safety codes and other information pertinent to correct crane operations.

B. Possess knowledge of emergency procedures and implementation of same.

C. Demonstrate to the employer the ability to operate the specific type of equipment.

D. Be familiar with the applicable safety regulations.

E. Understand responsibility for maintenance requirements of crane.

F. Be thoroughly familiar with the crane and its control functions.

G. Understand the operating procedures as outlined by the manufacturer.

CONDUCT OF OPERATORS

9 The operator shall not engage in any practice which will divert his attention while actually operating the crane.

10 Each operator shall be responsible for those operations under the operator's direct control. Whenever there is any doubt as to safety, the operator shall consult with the supervisor before handling the loads.

11 The operator should not leave a suspended load unattended unless specific precautions have been instituted and are in place.

12 If there is a warning sign on the switch or engine starting controls, the operator shall not close the switch or start the engine until the warning sign has been removed by the appointed person.

13 Before closing the switch or starting the engine, the operator shall see that all controls are in the "OFF" or neutral position and all personnel are in the clear.

14 If power fails during operation, the operator shall:

A. move power controls to the "OFF" or neutral position.

B. land the suspended load and boom, if practical.

15 The operator shall be familiar with the equipment and its proper care. If adjustments or repairs are necessary, the operator shall report the same

promptly to the appointed person, and shall also notify the next operator.

16 All controls shall be tested by the operator at the start of each shift. If any controls do not operate properly, they shall be adjusted or repaired before operations are begun.

17 Stabilizers shall be visible to the operator while extending or setting unless operator is assisted by a signal person.

OPERATING PRACTICES

HANDLING THE LOAD

18 Size of load

A. No crane shall be loaded beyond the rated load except for test purposes.

B. The load to be lifted is to be within the rated load of the crane and its existing configuration.

C. When loads which are not accurately known are to be lifted, the person responsible for the job shall ascertain that the weight of the load does not exceed the crane rated load at the radius at which the load is to be lifted.

19 Attaching the load

A. The load shall be attached to the hook by means of slings or other devices of sufficient capacity.

B. Hoist rope shall not be wrapped around the load.

20 Moving the load

A. The operator shall determine that:

B. The crane is level and, where necessary, the vehicle/carrier is blocked properly.

C. The load is well secured and balanced in the sling or lifting device before it is lifted more than a few inches.

D. Means are provided to hold the vehicle stationary while operating the crane.

E. Before starting to lift, the hook shall brought over the load in such a manner as to minimize swinging.

F. During lifting care shall be taken that:

1. there is no sudden acceleration or deceleration of the moving load.
2. load, boom or other parts of the crane do not contact any obstruction.

G. Cranes shall not be used for dragging loads sideways.

H. The operator should avoid carrying loads over people.

I. When the crane is so equipped, the stabilizers shall be fully extended and set. Blocking under stabilizers shall meet the requirements as follows:

1. strong enough to prevent crushing.
2. of such thickness, width and length as to completely support the stabilizer pad.

J. Firm footing under all tires, or individual stabilizer pads should be level. Where such a footing is not otherwise supplied, it should be provided by timbers, cribbing, or other structural members to distribute the load so as to not exceed allowable bearing capacity or the underlying material.

K. In transit, the boom shall be carried in stowed position.

L. The crane shall not be transported with a load on the hook unless recommended by the manufacturer.

M. No person should be permitted to stand or pass under a suspended load.

21 Stowing procedure. Follow the manufacturer's procedure and sequence when stowing and un-stowing the crane.

MISCELLANEOUS

OPERATING NEAR ELECTRICAL POWER LINES

22 Except where the electrical distribution and transmission lines have been de-energized and visibly grounded at point of work or where insulating barriers not a part of, or an attachment to, the crane have been erected to prevent physical contact with the lines, cranes shall operate so that no part of the crane or load enters within 10 ft. (3m).

A. caution shall be exercised when working near overhead lines having long spans as they tend to move laterally or vertically due to the wind which would breach the safety zone.

B. in transit with no load and boom lowered the clearance shall be 10 ft. (3.0m)

C. a qualified signal person shall be assigned to observe the 10 ft. (3.0m) clearance and give warning before approaching above.

23 Any overhead wire shall be considered to be an energized line unless and until the person owning such line or the electrical utility authorities verify that it is not an energized line.

24 Exceptions to this procedure, if approved by the administrative or regulatory authority if the alternate procedure provides equivalent protection and set forth in writing.

25 Durable signs shall be installed at the operator's station and on the outside of the crane, warning that electrocution or serious bodily injury may occur unless a minimum clearance of 10 ft. (3.0m) between the crane or the load being handled and energized power lines. Greater clearances are required because of higher voltage as stated above. These signs shall be revised but not removed when local jurisdiction requires greater clearances.

INSPECTION, TESTING AND MAINTENANCE

GENERAL

INSPECTION CLASSIFICATION

1 Initial inspection. Prior to initial use, all new, altered, modified or extensively repaired cranes shall be inspected by a designated person to insure compliance with provisions of this standard.

2 Regular inspection. Inspection procedure for cranes in regular service is divided into two general classifications based upon the intervals at which inspection should be performed. The intervals in turn are dependent upon the nature of the components of the crane and the degree of their exposure to wear, deterioration, or malfunction. The two general classifications are herein designated as "frequent" and "periodic" with respective intervals between inspections as defined below.

A. frequent inspection - daily to monthly intervals.

B. periodic inspection - one to twelve intervals, or as specifically recommended by the manufacturer.

FREQUENT INSPECTION

3 Inspection shall be performed by designated personnel.

A. control mechanisms for maladjustment interfering with proper operation - daily, when used;

B. control mechanisms for excessive wear of components and contamination by lubricants or other foreign matter;

C. safety devices for malfunction;

D. all hydraulic hoses, particularly those which flex in normal operation of crane functions, should be visually inspected once every working day, when used;

E. hooks and latches for deformation, chemical amage, cracks, and wear. Refer to ANSI/ASME B30.10;

F. rope reeving for compliance with crane manufacturer's specifications, if optional winch is used;

G. electrical apparatus for malfunctioning, signs of excessive deterioration, dirt and moisture accumulation;

H. hydraulic system for proper oil level and leaks daily;

I. tires for recommended inflation pressure, cuts and loose wheel nuts;

J. connecting pins and locking device for wear and damage;

PERIODIC INSPECTION

4 Deformed, cracked or corroded members in the crane structure and carrier;

5 Loose bolts, particularly mounting bolts;

6 Cracked or worn sheaves and drums;

7 Worn, cracked, or distorted parts such as pins, bearings, shafts, gears, rollers and devices;

8 Excessive wear on brake and clutch system parts and lining;

9 Crane hooks inspected for cracks;

10 Travel steering, braking, and locking devices, for malfunction;

11 Excessively worn or damaged tires;

12 Hydraulic and pneumatic hose, fittings, and tubing inspection;

A. evidence of leakage at the surface of the flexible hose or its junction with metal and coupling;

B. blistering, or abnormal deformation to the outer covering of the hydraulic or pneumatic hose;

C. leakage at threaded or clamped joints that cannot be eliminated by normal tightening or recommended procedures;

D. evidence or excessive abrasion or scrubbing on the outer surface of a hose, rigid tube, or fitting. Means shall be taken to eliminate the interference of elements in contact or otherwise protect the components.

13 Hydraulic and pneumatic pumps and motors inspection

A. loose bolts or fasteners;

B. leaks at joints between sections;

C. shaft seal leaks;

D. unusual noises or vibrations;

E. loss of operating speed;

F. excessive heating of the fluid;

G. loss of pressure.

14 Hydraulic and pneumatic valves inspection

A. cracks in valve housing;

B. improper return of spool to neutral position;

C. leaks at spools or joints;

D. sticking spools;

E. failure of relief valves to attain or maintain correct pressure setting;

F. relief valve pressure shall be checked as specified by the manufacturers.

15 Hydraulic and pneumatic cylinders inspection

A. drifting caused by fluid leaking across piston;

B. rod seals leaking

C. leaks at welding joints

D. scored, nicked, or dented cylinder rods;

E. damaged case (barrel);

F. loose or deformed rod eyes or connecting joints.

16 Hydraulic filters. Evidence of rubber particles on the filter elements may indicate hose, "O" ring, or other rubber component deterioration. Metal chips or pieces on the filter may denote failure in pumps, motors, or cylinders. Further checking will be necessary to determine origin of the problem before corrective action can be taken.

17 Labels are to be in place and legible.

CRANES NOT IN REGULAR USE

18 A crane which has been idle for a period of over one month or more, but not less than six months, shall be given an inspection conforming with the initial-regular- frequent inspections.

19 A crane which has been idle for a period of over six months shall be given a complete inspection conforming with the initial-regular-frequent inspection requirements.

INSPECTION RECORDS

20 Dated records for periodic inspection should be made on critical items such as brakes, crane hooks, rope, hydraulic and pneumatic cylinders, and hydraulic and pneumatic relief pressure valves. Records should be kept available to an appointed person.

OPERATIONAL TESTS

21 Prior to initial use, all new, altered, modified, or extensively repaired cranes shall be tested for compliance with the operational requirements of this section, including functions such as the following:

A. load lifting and lowering mechanisms;

B. boom lifting and lowering mechanisms;

C. boom extension and retraction mechanisms;

D. swing mechanisms;

E. safety devices;

F. operating controls comply with appropriate function labels.

Operational crane test results shall be made available to an appointed person.

MAINTENANCE

PREVENTIVE MAINTENANCE

22 Before adjustment and repairs are started on a crane, the following precautions shall be taken as applicable:

A. crane placed where it will cause the least interference with other equipment or operations;

B. all controls at the "off" position;

C. starting means rendered inoperative;

D. boom lowered to the ground if possible or otherwise secured against dropping;

E. relieve hydraulic oil pressure from all hydraulic circuits before loosening or removing hydraulic components.

23 Warning or "OUT OF ORDER" signs shall be placed on the crane controls.

24 After adjustments and repairs have been made, the crane shall not be returned to service until all guards have been reinstalled, trapped air removed from hydraulic system (if required), safety devices reactivated, and maintenance equipment removed.

ADJUSTMENTS AND REPAIRS

25 Any hazardous conditions disclosed by the inspection requirements shall be corrected before operation of crane is resumed, Adjustments and repairs shall be done only by designated personnel.

26 Adjustments shall be maintained to assure correct functioning of components, The following are examples:

A. functional operating mechanism;

B. safety devices;

C. control systems;

27 Repairs or replacements shall be provided as needed for operation.

The following are examples:

A. critical parts of functional operating mechanisms which are cracked, broken, corroded, bent, or excessively worn;

B. critical parts of the crane structure which are cracked, bent, broken, or excessively corroded;

C. crane hooks showing cracks, damage, or corrosion shall be taken out of service. Repairs by welding are not recommended.

28 Instructions shall be provided by the manufacturer for the removal of air from hydraulic circuits.

LUBRICATION

All moving parts of the crane, for which lubrication is specified, should be regularly lubricated per the manufacturer's recommendations and procedures.

ROPE INSPECTION

29 Frequent Inspection

A. All running ropes in service should be visually inspected once each working day. A visual inspection shall consist of observation of all rope which can be in use during the days operations. These visual observations should be considered with discovering gross damage such as listed below, which may be an immediate hazard;

1. distortion of the rope such as kinking, crushing, un-stranding, birdcaging, main strand displacement, or core protrusion. Loss of rope diameter in a short length or unevenness of outer strands should be replaced;
2. general corrosion;
3. broken or cut strands;
4. number, distribution and type of visible broken wires. When such damage is discovered, the rope shall either be removed from service or given as inspection.

B. Care shall be taken when inspecting sections of rapid deterioration such as flange points, crossover points, and repetitive pickup points on drums.

30 Periodic inspection

A. the inspection frequency shall be determined by a qualified person and shall be based on such factors as:

1. expected rope life as determined by experience on the particular installation or similar installations;
2. severity of environment;
3. percentage of capacity lifts;
4. frequency rates of operation;
5. exposure to shock loads;

Inspection need not be at equal calendar intervals and should be more frequent as the rope approaches the end of it's service life. This inspection shall be made at least annually.

B. Periodic inspection shall be performed by a designated person. This inspection shall cover the entire length of the rope. Only the surface wires need be inspected. No attempt should be made to open the rope. Any deterioration results in appreciable loss of original strength, such as described below, shall be noted and determination made as to whether use of the rope would constitute a hazard: points listed above reduction of rope diameter below nominal diameter due to loss of core support, internal or external corrosion, or wear of outside wires; severely corroded, cracked, bent, worn or improperly applied connections;

C. Care shall be taken when inspecting sections subject to rapid deterioration such as the following:

1. sections in contact with saddles, equalizer sheaves, or other sheaves where rope travel is limited;
2. sections of the rope at or near terminal ends where corroded or broken wires may protrude.

ROPE REPLACEMENT

31 No precise rules can be given for determination of the exact time for replacement of rope, since many variable factors are involved.

Continued use in this respect depends upon good judgement by a designated person in evaluating remaining strength in a used rope after allowance for deterioration disclosed by inspection. Continued rope operation depends upon this remaining strength.

32 Conditions such as the following shall be reason for questioning continued use of the rope or increasing the frequency of inspection:

A. in running ropes, six randomly distributed broken wires in one lay or three broken wires in one strand in one lay:

B. one outer wire broken at the contact point with the core of the rope structure and protrudes or loops out of the rope structure. Additional inspection of this section is required.

C. wear of one third of the original diameter of the outside individual wire.

D. kinking, crushing, birdcaging, or any other damage resulting in distortion of the rope structure.

E. evidence of any heat damage from any cause.

F. reduction from nominal diameter of more than 1/64 in. (0.4mm) for diameters up to and including 5/16 in. (8 mm), 1/32 in. (0.8 mm) for diameter 3/8 in. (9.5 mm) to and including 1/2 in. (13 mm), 3/64 in. (1.2 mm) for diameter 9/16 in. (14.5 mm) to and including 3/4 in. (19 mm). 1/16 in. (1.6 mm) for diameter 7/8 in. (22 mm) to and including 11/8 in. (29 mm), 3/32 in. (2.4 mm) for diameters 11/4 in. (32 mm) to and including 11/2 in. (38 mm).

G. In standing ropes, more than two broken wires in one lay in sections beyond end connections or more than one broken wire at an end connection.

H. Replacement rope shall have a strength rating at least as great as the original rope furnished or recommended by the crane manufacturer. Any deviation from the original size, grade, or construction shall be specified by a rope manufacturer, or a qualified person.

33 Rope not in regular use: all rope which has been idle for a period of a month or more due to shutdown or storage of a crane on which it is installed, shall be given and inspection in accordance with above information before it is placed in service. This inspection shall be for all types of deterioration and shall be performed by a qualified person.

34 Inspection records

A. frequent inspection- no records required

B. periodic inspections- in order to establish data as a basis for judging the proper time for replacement, a dated report condition at each periodic inspection should be kept on file. This report shall cover points of deterioration listed above.

ROPE MAINTENANCE

35 Rope should be stored to prevent damage or deterioration.

36 Unreeling or uncoiling of rope shall be done as recommended by the rope manufacturer and with care to avoid kinking or inducing twist.

37 Before cutting a rope, seizing shall be placed on each side of the place where the rope is to be cut to prevent unlaying of the strands. On preformed rope, one seizing on each side of the cut is required. On non-preformed ropes of 7/8 in. (22 mm) diameter or smaller, two seizings on each side of the cut are required, and for non-preformed rope 1 in. (25 mm) diameter or larger, three seizings on each side of the cut are required.

38 During installation care should be exercised to avoid dragging of the rope in the dirt or around objects which will scrape, nick crush or induce sharp bends in it.

39 When an operating rope shows greater wear or well defined localized areas than on the remainder of the rope, rope life can be extended in cases where a section at the worn end, and thus shifting the wear to different areas of the rope.

MOUNTING and INSTALLATION 5005H

1. CHECK TO MAKE SURE THE FOLLOWING ITEMS ARE WITH YOUR CRANE:

ITEM	PART NO.	DESCRIPTION
1.	360602000	Swivel Block
2.	360247000	Vented Relief Valve (Non-proportional Units Only)
3.	480525000	Control Valve Assembly (Proportional Units Only)
4.	360030000	Pump Assembly (Optional)
5.	999937000	Owners Manual
6.	015104000	Bolt system: 7/8 NF x 5", Grade 8, (4 Req'd)

2. PRESSURE AND RETURN HOSES ARE NOT FURNISHED WITH THIS CRANE. THE HOSES MUST BE PROVIDED BY THE INSTALLER AND THE LENGTHS DETERMINED AT INSTALLATION.

   REQUIREMENTS FOR INSTALLATION USING 8 GALLON RESERVOIR WITH RELIEF VALVE AND AUTO CRANE PROVIDED PUMP
   (REF. DWG AW-023 & AW-480150)

   A. RETURN LINE FROM CRANE TO RESERVOIR (IN COMPARTMENT): -8 SAE 100R2 (OR EQUIVALENT). HOSE LENGTH IS DETERMINED BY INSTALLER. RETURN LINES LONGER THAN 6 FEET SHOULD BE SIZE -12. HOSE END FITTINGS ARE -8 JIC FEMALE SWIVEL (CRANE END) AND -10 JIC FEMALE SWIVEL (RESERVOIR END).

   B. PRESSURE LINE FROM VENTED RELIEF VALVE TO CRANE: -8 SAE 100R2 (OR EQUIVALENT). HOSE LENGTH IS DETERMINED BY INSTALLER. HOSE END FITTINGS ARE BOTH -8 JIC FEMALE SWIVEL. NOTE: CRANE MUST USE RELIEF VALVE P/N 480157, WHICH IS PROVIDED.

   C. SUCTION HOSE FROM PUMP TO RESERVOIR: -16 HYDRAULIC SUCTION HOSE WITH TOW (2) -16 HOSE CLAMPS ON EACH END.

   D. PRESSURE LINE FROM PUMP TO VENTED RELIEF VALVE (LOCATED ON RESERVOIR) : -12 SAE 100R2 (OR EQUIVALENT). HOSE LENGTH IS DETERMINED BY INSTALLER. HOSE END FITTINGS ARE BOTH -10 JIC FEMALE SWIVEL.

   NOTE:
   REFER TO OWNERS MANUAL FOR ADDITIONAL INSTALLATION INFORMATION, AND OTHER RESERVOIR AND PUMP COMBINATIONS.

CAUTION - FAILURE TO USE CLEAN HYDRAULIC HOSES AND COMPONENTS MAY CONTAMINATE THE CRANE AND HYDRAULIC SYSTEM AND VOID WARRANTY.

3. CRANE MUST BE PROVIDED WITH A FLOW OF 6 GALLONS PER MINUTE AND A PRESSURE OF 2200 PSI. EXCESS FLOW WILL CAUSE ERRATIC OPERATION, AND TOO LITTLE FLOW WILL CAUSE POOR CRANE OPERATION.
4. MAKE SURE MOUNTING SURFACE IS PROPERLY REINFORCED TO WITHSTAND 25,000 FT-LB CAPACITY LOADING OF CRANE AND THAT OUTRIGGERS ARE USED TO PROVIDE TOTAL STABILITY FOR THE TRUCK.
5. MAKE SURE THE MOUNTING BOLTS ARE 7/8x5, GRADE 8. TORQUE BOLTS TO 440 FT-LBS (DRY).
6. WHEN CRANE IS NOT IN OPERATION, A BOOM SUPPORT SHOULD ALWAYS BE USED. TRAVELING BLOCK SHOULD BE CONNECTED TO HOOK LOOP.
7. ALWAYS USE CABLE LOOPS ON SIDE OF BOOM AND PENDANT GUARD ON SIDE OF PEDESTAL TO STORE PENDANT ASSEMBLY, IF THIS TYPE OF STORAGE APPLIES.
8. THE VEHICLE MUST BE EQUIPPED WITH AN ENGINE SPEED CONTROL AND TACHOMETER.

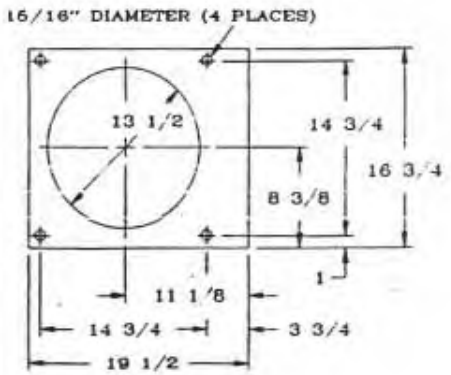

FORWARD

MOUNTING and INSTALLATION 5005H

(CONTINUED)

9. CHECK FOR PROPER PRESSURE AND RETURN LINE HOOK-UP TO CRANE: ***PRESSURE PORT IS ON RIGHT SIDE AS VIEWED FROM THE REAR OF THE CRANE.***
10. USE MEDIUM PRESSURE AUTO CRANE FILTER IN THE RETURN LINE UNLESS FILTER EXIT PORT IS MOUNTED DIRECTLY TO THE RESERVOIR.
11. ELECTRICAL HOOKUP

    NON-REMOVABLE PENDANT UNITS:

    A. RUN THE FOLLOWING WIRES THROUGH HOLE IN BASE ASSEMBLY OF CRANE AND SEAL WITH SILICONE RUBBER TO PREVENT WIRE CHAFING AND LEAKS.

    B. CONNECT WIRE FROM DIRECTIONAL VALVE SOLENOID (P/N 480137) TO WHITE WIRE W/TRACER AT PENDANT CABLE END (REF. AW-480093).

    C. CONNECT POWER CONDUCTOR FROM STARTER SOLENOID TO BLACK WIRE AT BASE OF CRANE, PASSING THROUGH THE MAIN POWER RELAY. USE THE IN-LINE FUSE PROVIDED.

    REMOVABLE PENDANT UNITS:

    A. OBTAIN THE PROPER WIRING DIAGRAM.

    B. WIRE TERMINAL STRIP PER DIAGRAM AND PROTECT STRIP FROM ACCIDENTAL CONTACT.

WARNING! FAILURE TO CORRECTLY PLUMB AND WIRE CRANE CAN CAUSE INADVERTENT OPERATION AND DAMAGE TO CRANE AND/OR PERSONNEL!

12. ONCE CRANE AND PLUMBING ARE INSTALLED ON THE TRUCK, FILL THE RESERVOIR TO TOP OF SIGHT GLASS (MOBIL DTE 13 or EQUAL). BEFORE OPERATING CRANE CONNECT TOGETHER THE PRESSURE AND RETURN HOSES GOING TO BASE OF CRANE USING -8 JIC UNION AND ENGAGE PTO WITH ENGINE RUNNING. ALLOW OIL TO CIRCULATE FOR 15 TO 20 MINUTES. THIS WILL FLUSH CONTAMINANTS FROM THE SYSTEM BACK TO THE RETURN LINE FILTER. OPERATE ALL CYLINDERS TO FULL EXTENSION AND RETRACTION A MINIMUM OF SIX TIMES, TO BLEED AIR FROM SYSTEM. RETURN ALL CYLINDERS TO THE STORED POSITION AND DISENGAGE PTO. REFILL RESERVOIR TO TOP SIGHT GLASS. TO ENSURE 6 GALLONS PER MINUTE (GPM), INSTALL AN IN-LINE FLOW METER BETWEEN THE CRANE AND THE RESERVOIR IN THE RETURN HOSE, OR CONFIRM PUMP SPEED IS CORRECT. THE PROPER SPEED FOR AUTO CRANE GEAR PUMP P/N 360030 IS 1000 RPM.
13. PROPER PRESSURE SETTING CAN BE ACHIEVED BY, WITH THE PTO DISENGAGED, REMOVING THE PIPE PLUG ON THE VENTED RELIEF VALVE OR PROPORTIONAL VALVE AND INSTALLING A 2500 PSI PRESSURE GAUGE. EXTEND THE BOOM "IN" ALL THE WAY AND CONTINUE HOLDING THE SWITCH ON. FOR PROPORTIONAL SYSTEMS, THE TRIGGER SHOULD BE PULLED COMPLETELY BACK (ON). READ THE PRESSURE GAUGE AND ADJUST RELIEF VALVE TO READ 2200 PSI. RECHECK PRESSURE SETTING TO VERIFY ADJUSTMENT.
14. LOAD TEST THE CRANE TO ENSURE PROPER FUNCTIONING AND TRUCK STABILITY.
15. MAKE CERTAIN THE OWNER'S MANUAL IS DELIVERED TO THE CUSTOMER.
16. FOR ADDITIONAL HELP: CALL THE SERVICE DEPARTMENT AT THE AUTO CRANE COMPANY. (918) 836-0463 (TULSA, OKLAHOMA)

WARNING

FEDERAL LAW (49 CFR PART 571) REQUIRES THAT THE FINAL STAGE MANUFACTURER OF A VEHICLE CERTIFY THAT THE VEHICLE COMPLIES WITH ALL APPLICABLE FEDERAL REGULATIONS. ANY MODIFICATIONS PERFORMED ON THE VEHICLE PRIOR TO THE FINAL STAGE ARE ALSO CONSIDERED INTERMEDIATE STAGE MANUFACTURING AND MUST BE CERTIFIED AS TO COMPLIANCE. THE INSTALLER OF THIS CRANE AND BODY IS CONSIDERED ONE OF THE MANUFACTURERS OF THE VEHICLE. AS SUCH A MANUFACTURER, THE INSTALLER IS RESPONSIBLE FOR COMPLIANCE WITH ALL APPLICABLE FEDERAL AND STATE REGULATIONS, AND IS REQUIRED TO CERTIFY THAT THE VEHICLE IS IN COMPLIANCE.

IT IS THE FURTHER RESPONSIBILITY OF THE INSTALLER OF THE CRANE TO COMPLY WITH THE OSHA TRUCK CRANE STABILITY REQUIREMENTS AS SPECIFIED BY 29 CFR PART 1910.180 (C) (1).

FIXTURE NO.	FINISH NO.

CHG LTR	REVISIONS DESCRIPTION	DATE	APP'D

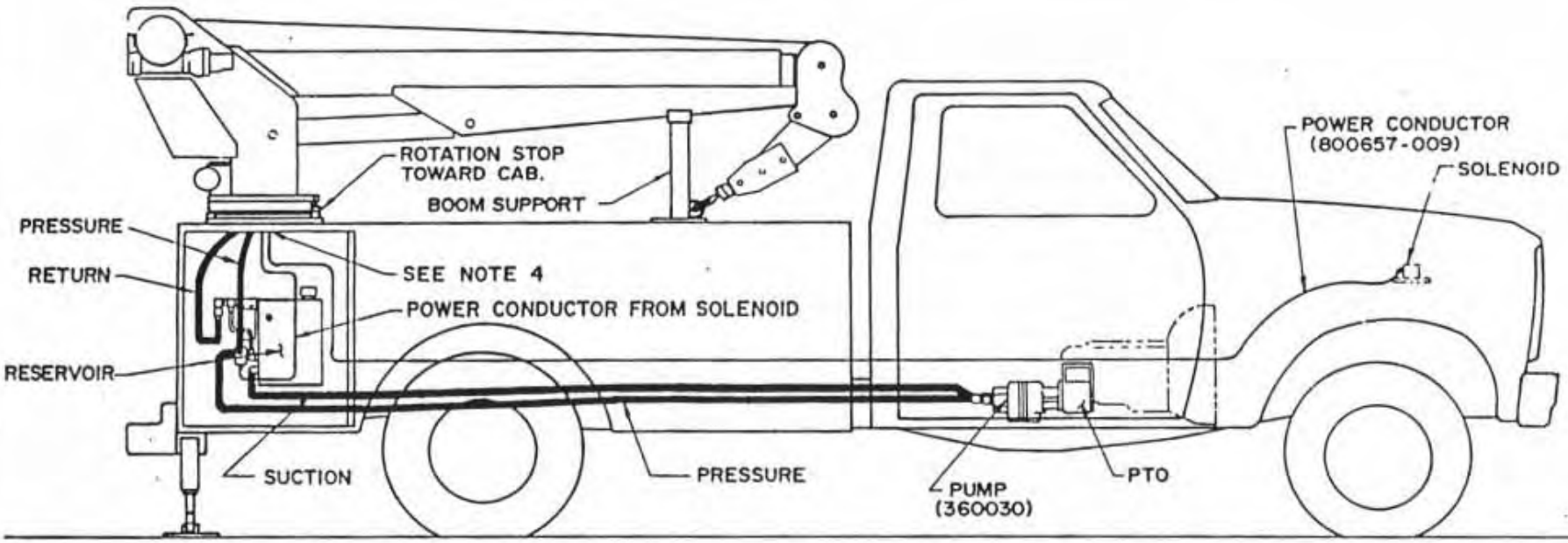

NOTES:

1. SEE PAGE 4 FOR FURTHER INSTRUCTIONS.
2. THE INSTALLATION ABOVE SHOWN IN SOLID LINE FORM FOR CLARITY.
3. THE PRESSURE AND RETURN HOSES FROM THE RESERVOIR TO THE CRANE SHOULD BE AS LONG AS POSSIBLE TO ALLOW FOR ROTATION.
4. AFTER POWER CONDUCTORS ARE INSERTED THROUGH HOLE IN BASE OF CRANE, SEAL ALL AROUND WITH SILICONE RUBBER OR EQUAL, TO PREVENT WIRE DAMAGE.

QUANTITY	ITEM	D/S	PART NO.	DESCRIPTION

LIST OF MATERIAL

UNLESS OTHERWISE NOTED ALL DIMENSIONS ARE IN INCHES
TOLERANCES UNLESS OTHERWISE SPECIFIED
ANGLES ± 1/2° | .XX ± .40
FRACTIONAL ± 1/16 | .XXX ± .010
REMOVE ALL BURRS AND SHARP EDGES. DO NOT SCALE THIS DRAWING
TOLERANCES NOT SHOWN ABOVE ARE PER ANSI Y14.5 1973

THIS PRINT IS THE PROPERTY OF AUTO CRANE CO AND MUST NOT BE USED IN ANY MANNER DETRIMENTAL TO THEIR INTERESTS

DRAWN BY Armstrong
DATE 2-23-83
CHK'D BY
DATE
ENG BY
DATE

AUTO CRANE COMPANY

TITLE
MOUNTING AND INSTALLATION
5005H

SCALE	SIZE	DRAWING NO	REVISION
~	B	AW-023	

WEIGHT
SHEET 1 OF 2

7/86 NEXT ASS'Y

FIXTURE NO.	FINISH NO.

CHG LTR	REVISIONS DESCRIPTION	DATE	APP'D

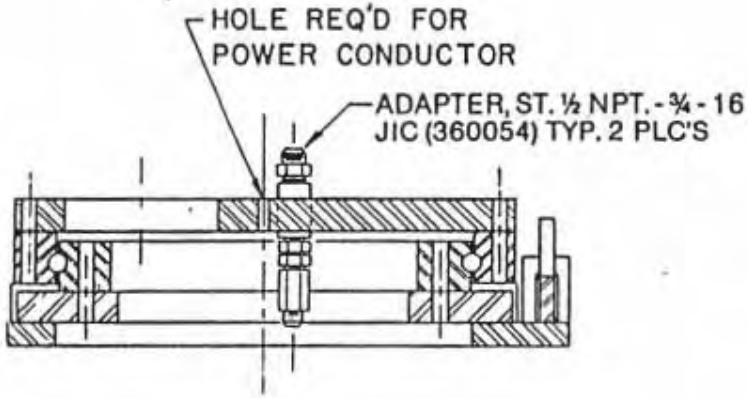

SECTION A-A

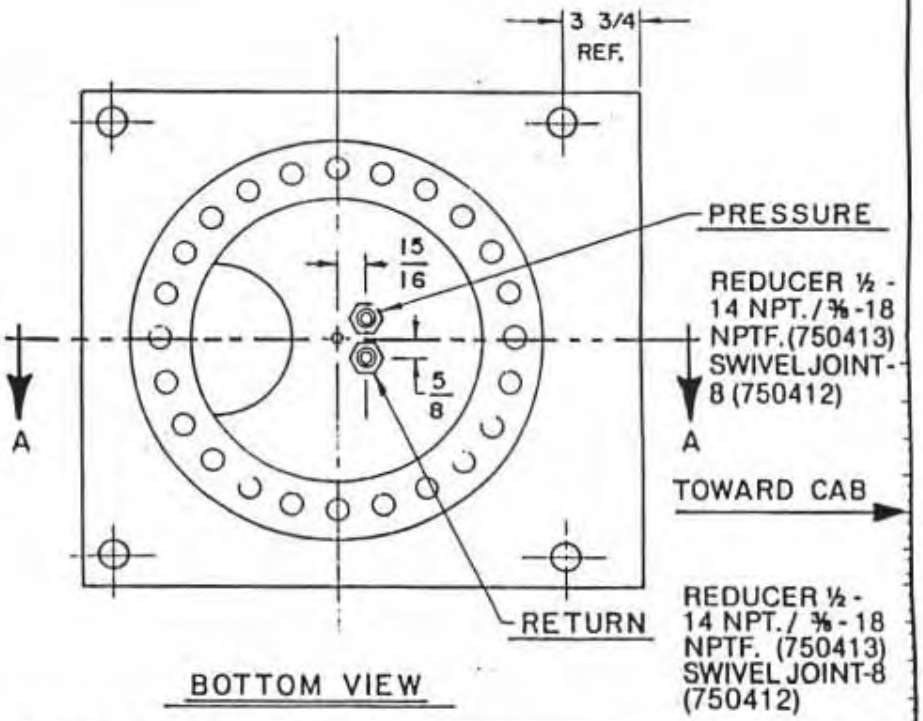

BOTTOM VIEW

QUANTITY	ITEM	D/S	PART NO.	DESCRIPTION

LIST OF MATERIAL

UNLESS OTHERWISE NOTED ALL DIMENSIONS ARE IN INCHES. TOLERANCES UNLESS OTHERWISE SPECIFIED.
ANGLES ± 1/2° | .XX ± .40
FRACTIONAL ± 1/16 | .XXX ± .010
REMOVE ALL BURRS AND SHARP EDGES. DO NOT SCALE THIS DRAWING.
TOLERANCES NOT SHOWN ABOVE ARE PER ANSI Y14.5 - 1973

THIS PRINT IS THE PROPERTY OF AUTO CRANE CO. AND MUST NOT BE USED IN ANY MANNER DETRIMENTAL TO THEIR INTERESTS.

DRAWN BY R.D.
DATE 7/10/86
CHK'D BY
DATE
ENG. BY
DATE

AUTO CRANE COMPANY

TITLE
BASE ASSEMBLY - 5005H

SCALE	SIZE	DRAWING NO	REVISION
—	B	ENG - 61	—

WEIGHT
SHEET 1 OF 1

12/86 NEXT ASS'Y

RIDGWAYS 1000H

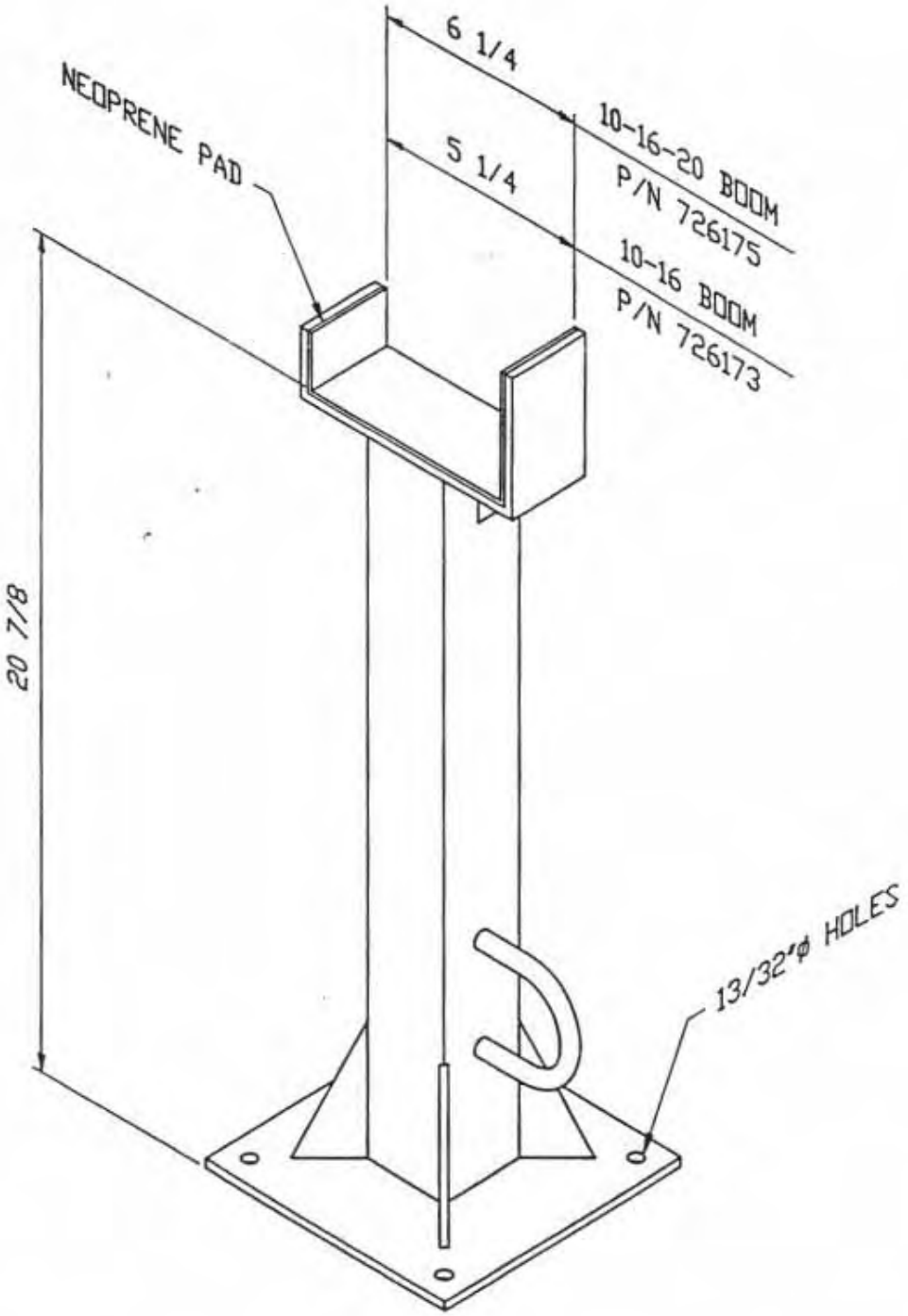

NOTE:

FOR 10–16–20 BOOM, ORDER AUTO CRANE P/N 726175

FOR 10–16 BOOM, ORDER AUTO CRANE P/N 726173

AW–359
5005H/EH BOOM SUPPORT

Auto Crane Company
Tulsa, Oklahoma

Safety Decal Section
5005H

Revision 9/94

ITEM	DESCRIPTION	QTY	FIG
1	CAUTION, WORK RULES	1	5-1
2	DANGER, OPERATOR TRAINING	1	5-2
3	WARNING, TAPERING WITH OVERLOAD	1	5-3
4	DANGER, ELECTROCUTION HAZARD	2	5-4
5	DANGER, STAY CLEAR OF BOOM	2	5-5
6	DANGER, STAY CLEAR OF LOAD	2	5-6
7	CAUTION, HYD REQUIREMENTS (10-16 MAN)	1	5-7
8	WARNING, LOAD SENSOR TAMPERING	1	5-8
9	DANGER, SCISSORS POINT	2	5-9
10	CAUTION, HYD REQUIREMENTS (POWER EXTENDIBLE CRANES	1	5-10

AUTO CRANE COMPANY
PO BOX 580697, Tulsa, OK 74158-0697
4707 N. MINGO ROAD, Tulsa, OK 74117
Phone (918) 836-0463, Telex 158108 Ramsey Tul
Sales Fax (918) 438-6688 Service Fax (918) 834-5979

SAFETY DECAL SECTION
5005H

Revision 9/94

PART NO.: 040579

DECAL: OPERATION INSTRUCTIONS

FUNCTION: To inform the operator of the proper procedure to follow for safe operation of the crane.

USED ON: All Cranes

QUANTITY: 1

PLACEMENT: Right sideplate

FIG. S-1.

PART NO.: 040580

DECAL: OPERATOR TRAINING

FUNCTION: To inform the operator of the need to receive proper training before using the crane.

USED ON: All Cranes

QUANTITY: 1

PLACEMENT: Right sideplate (5005H)

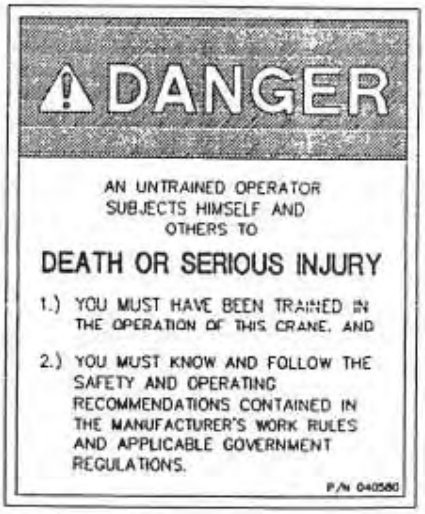

FIG. S-2.

PART NO.: 040632

DECAL: TAMPERING WITH OVERLOAD DEVICE

FUNCTION: To inform the operator that tampering with the overload device may cause a unit failure or possible personnel injury.

USED ON: 5005H

QUANTITY: 1

PLACEMENT: Right side of valve cover

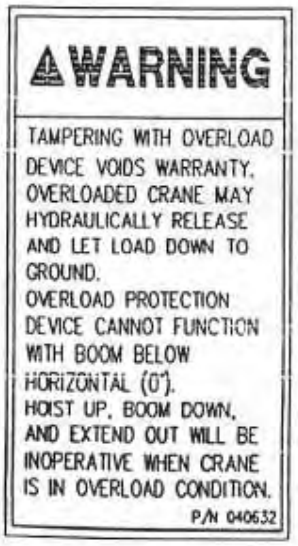

FIG. S-3.

SAFETY DECAL SECTION
5005H

Revision 9/94

PART NO.: 040529

DECAL: ELECTROCUTION HAZARD

FUNCTION: To inform the operator of the hazard involved with contacting electrical power lines with crane boom.

USED ON: Articulated & Stiff Boom Cranes

QUANTITY: 2

PLACEMENT: Both sides of end of lower boom

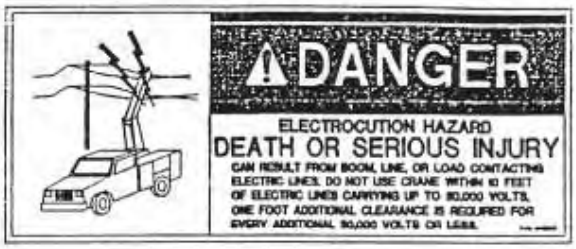

FIG. S-4.

PART NO.: 040517

DECAL: STAY CLEAR OF BOOM

FUNCTION: To inform the operator of the hazard of proximity or contact with the crane boom during operation.

USED ON: All cranes

QUANTITY: 2

PLACEMENT: Both sides of crown

PART NO.: 040518

DECAL: STAY CLEAR OF LOAD

FUNCTION: To inform the operator of the hazard of proximity or contact with the crane load during operation.

USED ON: All cranes

QUANTITY: 2

PLACEMENT: Both sides of crown plate

SAFETY DECAL SECTION
5005H

Revision 9/94

PART NO.: 040633

DECAL: HYDRAULIC REQUIREMENT 5005H 10-16 MANUAL

FUNCTION: To inform the operator of the hydraulic requirements for proper crane operation.

USED ON: 5005H 10-16 manual

QUANTITY: 1

PLACEMENT: On the hydraulic reservoir

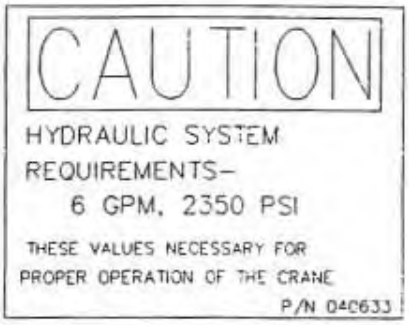

FIG. S-7.

PART NO.: 040587

DECAL: LOAD SENSOR, DON'T TAMPER

FUNCTION: To inform the operator that the load sensor is pre-set and that tampering with the sensor may cause potentially hazardous situation.

USED ON: All cranes equipped with a load sensor.

QUANTITY: 1

PLACEMENT: On the lift cylinder near the load sensor

FIG. S-8.

PART NO.: 040519

DECAL: SCISSORS POINT

FUNCTION: To inform the operator of possible danger at scissors point on crane.

USED ON: All cranes

QUANTITY: 2

PLACEMENT: Both sides of the lift cylinder

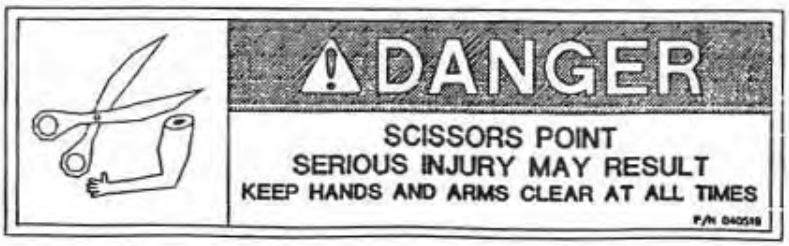

FIG. S-9.

SAFETY DECAL SECTION
5005H

Revision 9/94

PART NO.: 040638

DECAL: HYDRAULIC SYSTEM REQUIREMENTS

FUNCTION: To inform the operator of the required hydraulic requirements for proper operation of the crane.

USED ON: 5005H Power Extendible units

QUANTITY: 1

PLACEMENT: On the reservoir or near the control valve

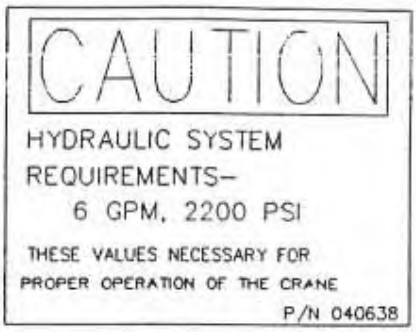

FIG. S-10.

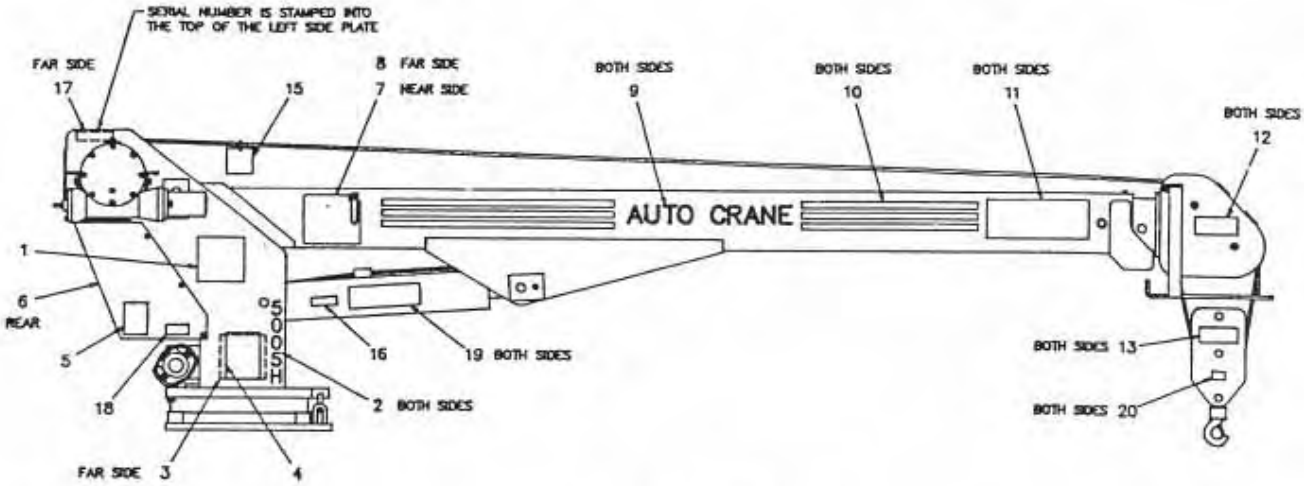

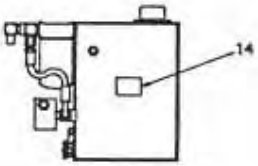

RESERVOIR

ITEM	QTY	PART NO.	DESCRIPTION
1	1	040579	DECAL, CAUTION–WORK RULES
2	2	360033	DECAL, 5005H
3	1	360869	DECAL, LOAD CHART
4	1	040580	DECAL, DANGER–OPERATE
5	1	040632	DECAL, DANGER–CYL. OPERATION
6	1	360034	DECAL, LOGO
7	1	360036	DECAL, ANGLE INDICATOR, RIGHT
8	1	360037	DECAL, ANGLE INDICATOR, LEFT
9	2	040624	DECAL, AUTO CRANE
10	13'	040620	STRIPING
11	2	040529	DECAL, DANGER–SHOCK
12	2	040517	DECAL, DANGER–STAY CLEAR
13	2	040518	DECAL, DANGER–STAY CLEAR
14	1	040633	CAUTION – 6 GPM
15	1	999943	INSTALLATION CHECKLIST
16	1	040587	DECAL, WARNING–LOAD SENSOR
17	1	330622	DECAL, SERIAL NO.
18	1	330633	DECAL, OPTI–FLOW
19	2	040519	DECAL, DANGER–SCISSOR POINT
20	2	360602–100	DECAL, BLOCK WEIGHT & MAX. LOAD

AW–360552
5005H DECAL LAYOUT
10–16 BOOM

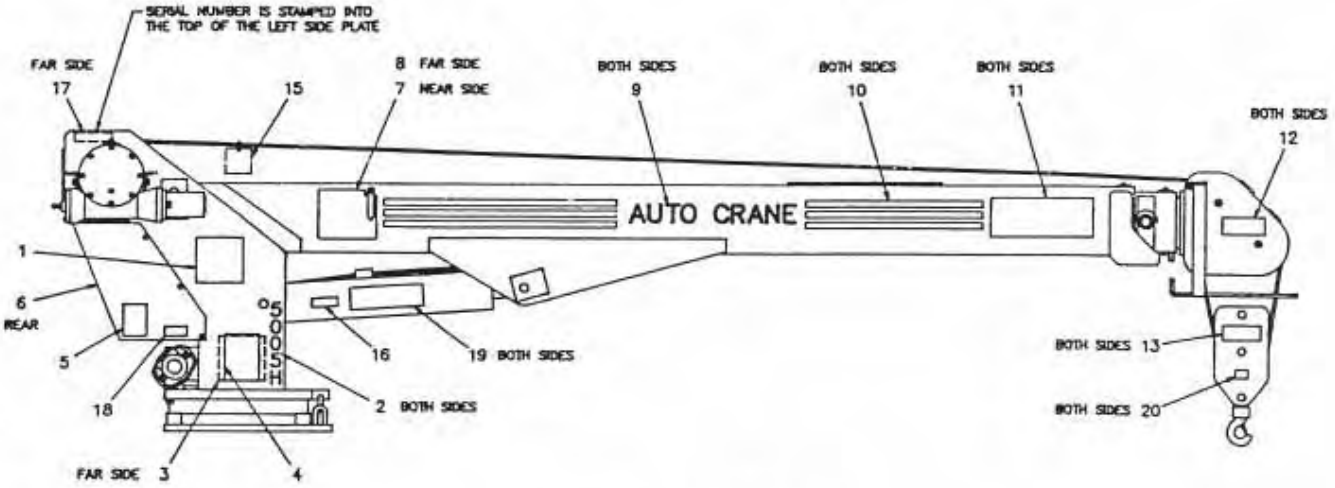

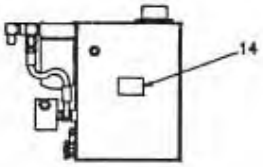

RESERVOIR

ITEM	QTY	PART NO.	DESCRIPTION
1	1	040579	DECAL, CAUTION–WORK RULES
2	2	360033	DECAL, 5005H
3	1	360838	DECAL, LOAD CHART
4	1	040580	DECAL, DANGER–OPERATE
5	1	040632	DECAL, DANGER–CYL. OPERATION
6	1	360034	DECAL, LOGO
7	1	360036	DECAL, ANGLE INDICATOR, RIGHT
8	1	360037	DECAL, ANGLE INDICATOR, LEFT
9	2	040624	DECAL, AUTO CRANE
10	13'	040620	STRIPING
11	2	040529	DECAL, DANGER–SHOCK
12	2	040517	DECAL, DANGER–STAY CLEAR
13	2	040518	DECAL, DANGER–STAY CLEAR
14	1	040633	CAUTION – 6 GPM
15	1	999943	INSTALLATION CHECKLIST
16	1	040587	DECAL, WARNING–LOAD SENSOR
17	1	330622	DECAL, SERIAL NO.
18	1	330633	DECAL, OPTI–FLOW
19	2	040519	DECAL, DANGER–SCISSOR POINT
20	2	360602–100	DECAL, BLOCK WEIGHT & MAX. LOAD

AW–360752
5005H DECAL LAYOUT
10–16–20 BOOM

NOTES

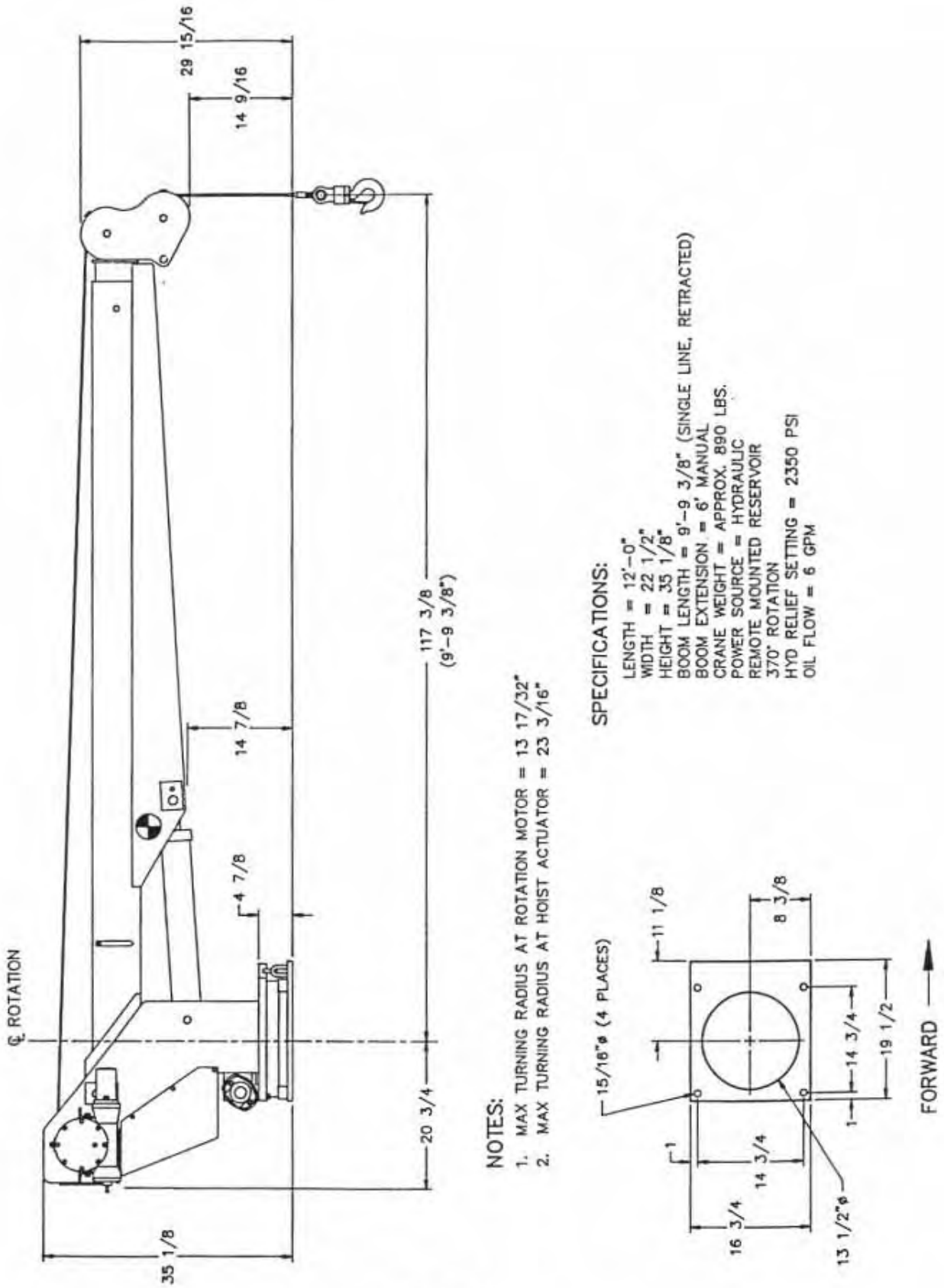

AW-362
5005H GENERAL DIMENSIONS & SPECIFICATIONS
MANUAL EXTENSION

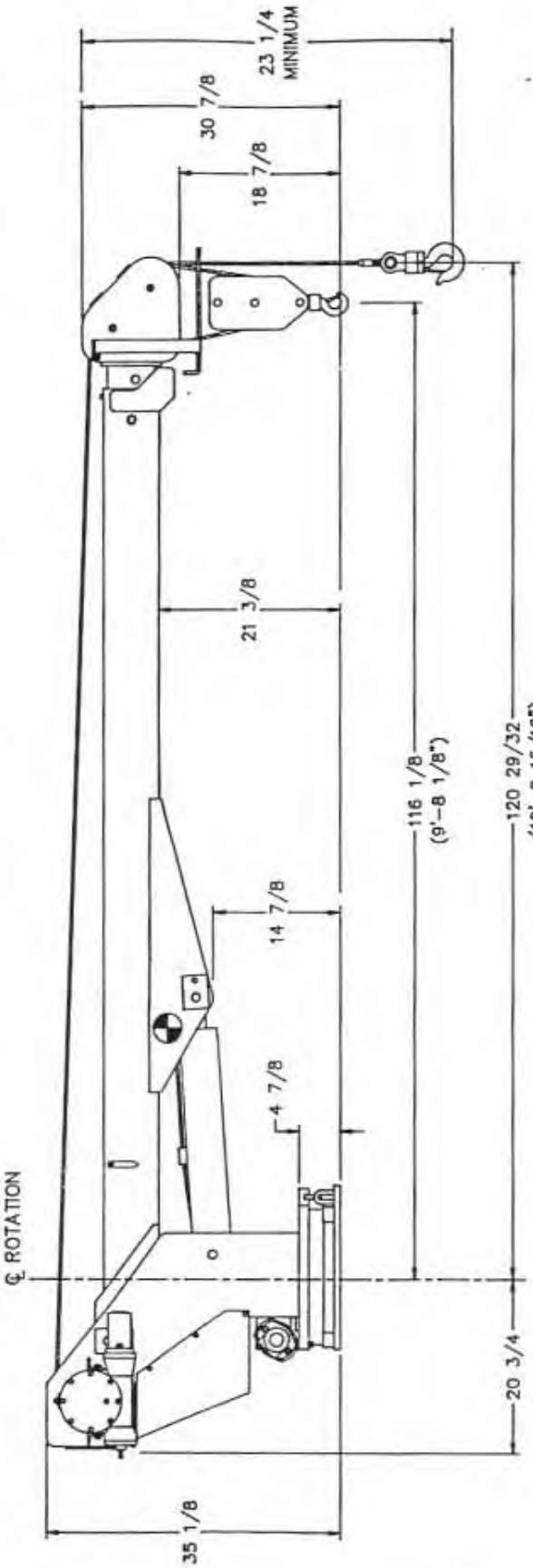

NOTES:

1. MAX TURNING RADIUS AT ROTATION MOTOR = 13 17/32"
2. MAX TURNING RADIUS AT HOIST ACTUATOR = 23 3/16"

SPECIFICATIONS:

LENGTH = 12'-0"
WIDTH = 22 1/2"
HEIGHT = 35 1/8"
BOOM LENGTH = 10'-0 15/16"* (SINGLE LINE, RETRACTED)
BOOM EXTENSION = 6' POWER
CRANE WEIGHT = APPROX. 890 LBS.
POWER SOURCE = HYDRAULIC
REMOTE MOUNTED RESERVOIR
370° ROTATION
HYD RELIEF SETTING = 2200 PSI
OIL FLOW = 6 GPM

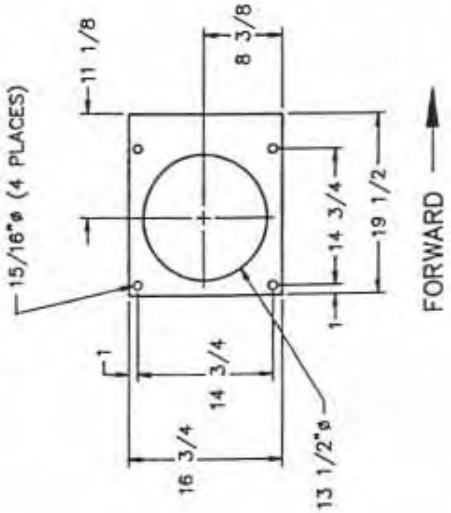

AW-363
5005H GENERAL DIMENSIONS & SPECIFICATIONS
10-16 BOOM

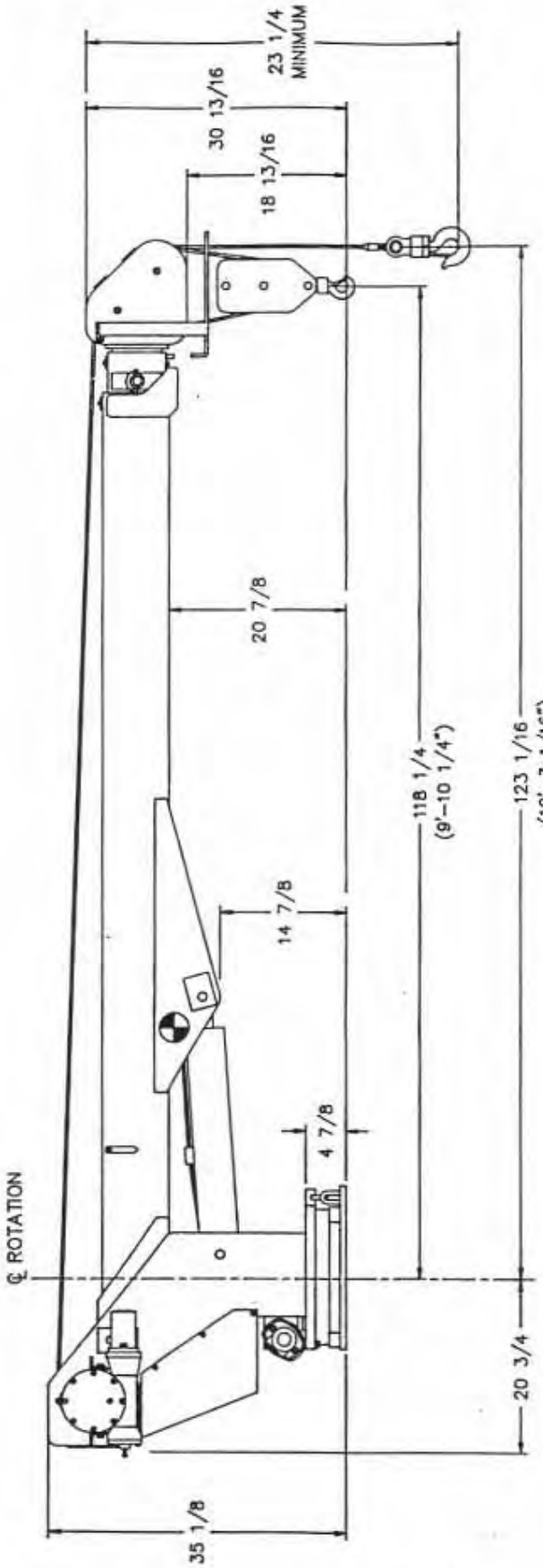

NOTES:

1. MAX TURNING RADIUS AT ROTATION MOTOR = 13 17/32"
2. MAX TURNING RADIUS AT HOIST ACTUATOR = 23 3/16"

SPECIFICATIONS:

LENGTH = 12'-0"
WIDTH = 22 1/2"
HEIGHT = 35 1/8"
BOOM LENGTH = 10'-3 1/16"* (SINGLE LINE, RETRACTED)
BOOM EXTENSION
POWER - 6'
MANUAL - 4'
TOTAL - 10'
CRANE WEIGHT = APPROX. 990 LBS.
POWER SOURCE = HYDRAULIC
REMOTE MOUNTED RESERVOIR
370° ROTATION
HYD RELIEF SETTING = 2200 PSI
OIL FLOW = 6 GPM

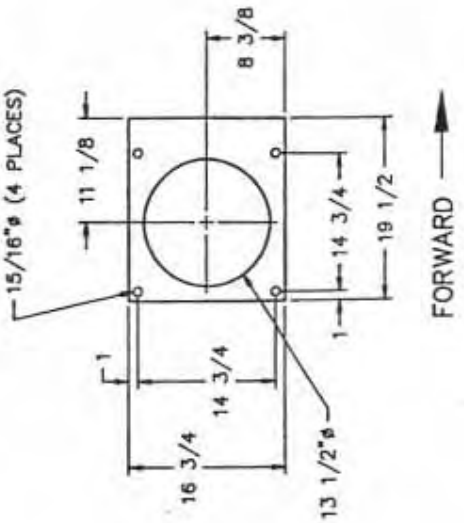

AW-364
5005H GENERAL DIMENSIONS & SPECIFICATIONS
10-16-20 BOOM

INSTALLATION AND SETUP PROCEDURE
DIGITAL PULSE WIDTH AMPLIFIER

INSTALLATION:

1. Install amplifier at a convenient location near the proportional crane terminal strip (ref.: Owner's Manual, PROPORTIONAL CRANE WIRING DIAGRAMS) using two screws and lock nuts provided.
2. At the 12 station terminal block, disconnect all power to the system.
3. Connect the din connector plug to the proportional valve, making sure the gasket seals properly. Secure the plug to the proportional valve coil with screw. Attach wires per applicable wiring diagram.

ATTACH WIRES IN THIS ORDER: (numbers are on 22 station terminal strip)

1. Attach the **BLACK** wire to terminal "N" (#13)
2. Attach the **RED** wire to terminal "T" (#10)
3. Attach the **WHITE** wire to terminal "M" (#12)
4. Attach the **GREEN** wire to the **BROWN** wire from the proportional din connector plug using the bullet connector supplied

CAUTION: FAILURE TO DO SO MAY CAUSE PREMATURE AMPLIFIER FAILURE AND VOID WARRANTY.

- **Observe all connections for proper installation before connecting power to the terminal block. Proceed to the set-up procedure.**

SETUP:

1. Remove four screws on front plate of amplifier and remove front plate.
2. With power on, pull pendant trigger to full on position. Adjust potentiometer adjustment screw located next to the red light (see Figure 1) until light just turns off, then turn trim pot back until the light just comes on. The light should stay on during full trigger movement. Clockwise rotation of the trim pot will turn light off. Counter-clockwise rotation will turn the light on. This "tunes" the amplifier to the trigger potentiometer.
3. After warming the hydraulic system oil, determine which function should be used to set the low position switch (ROTATE USES THE LEAST AMOUNT OF PRESSURE). Activate that function with trigger released, and turn the lower range setting dial (REF. FIG 1: MARKED WITH "L" ON CIRCUIT BOARD) until the desired speed is reached. The "Zero" and the "F" on the dial are opposite ends of the switch. To adjust the low set point, **turn CLOCKWISE DIRECTION for INCREASED FLOW, COUNTER CLOCKWISE DIRECTION for DECREASED FLOW.** This adjusts the "Threshold Speed" for the trigger in the released position.

4. Operate the boom up function with trigger pulled back to the maximum position. Turn the high range setting dial (REF. FIG 1, MARKED WITH "H" ON CIRCUIT BOARD) until there is a noticeable decrease in speed, then back up one or two notches as desired. "Zero" is the maximum speed setting and "F" is the most reduced speed setting. To set the high range dial, **turn CLOCKWISE DIRECTION for DECREASED FLOW, COUNTER CLOCKWISE DIRECTION FOR INCREASED FLOW.** This operation adjusts the trigger "Dead Band" at the fully pulled position.

5. Replace cover and install screws. Make sure the amplifier wiring is secured and does not interfere with rotating hoses and electrical wiring.

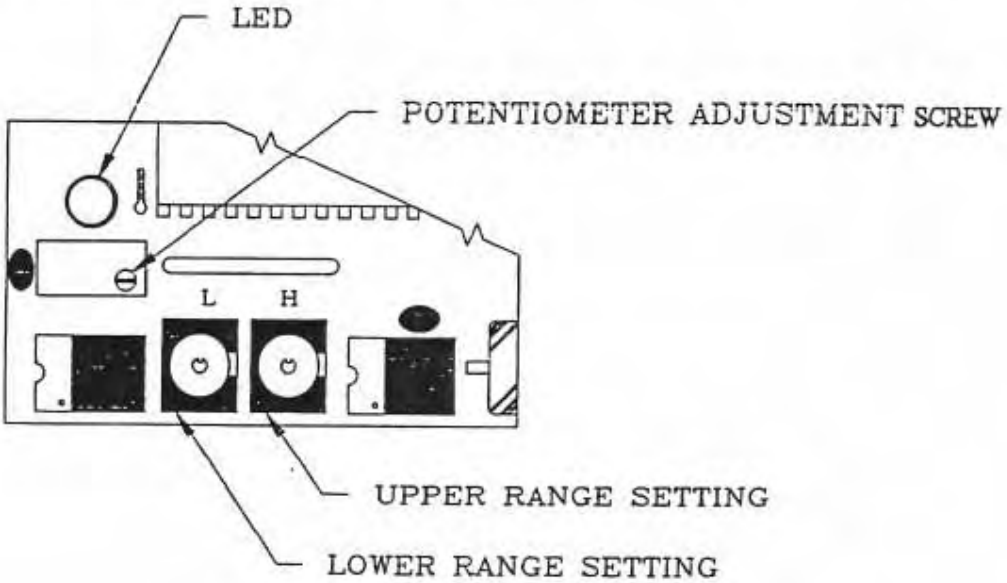

Figure 1

OVERLOAD SYSTEM / ANTI-2-BLOCK TROUBLE SHOOTING GUIDE

IF THE THREE FUNCTIONS, BOOM DOWN, HOIST UP AND EXTEND OUT, QUIT WORKING, the problem probably lies in either the Overload System or the Anti-2-block system or both. If these three functions are NOT WORKING and most other functions are, an investigation should be made as follows: (reference: Figure 1)

1 ANTI-2-BLOCK

A. Unplug the anti-2-block system from the overload system and connect A and B to bypass the anti-2-block system.

1. If the three functions work, check continuity of anti-2-block system using continuity tester at disconnected Weatherpack connectors, and investigate switch at end of boom, cable and cable reel.
2. If the three functions do not work, continue on with section #2.

2 LOAD SENSOR (Pressure Switch)

A. With crane unloaded, unplug weatherpack connector on load sensor wire.

1. If the three functions work, re-check the Pressure Switch by taking a ohm reading on the two wires coming from the Switch. The switch has normally open contacts, so the reading should be the maximum. If less than maximum ohm reading is indicated (usually a dead short), replace the Switch.
2. If the three functions do not work, continue with section #3.

3 RELAY BOX

A. Carefully open the black plastic box lid covering the overload system timer and relay. Carefully remove the yellow wire terminal from tab #1.

1. If the three functions begin to work, connect the wire connector (yellow wire) to a ground to double check the operation of the relay switch. With the wire grounded the three functions should **not** work. With the wire ungrounded the system should work.
2. If the three functions do not work, replace the Relay and re-attach yellow wire to terminal #1.
3. If the three functions work with the new relay when it is installed but not when it is reconnected to the Time Delay Relay, re-attach yellow wire to terminal #1 and continue on with section #4.

4 TIME DELAY RELAY

A. With the black plastic box still open, remove the wires connected to terminals #6 and #7. Remove any dirt, corrosion and moisture from around terminals.

1. If the relay resets after this and the load sensor has been previously checked, spray area around terminals with protective coating before replacing box lid.
2. If the three functions still do not work, continue on with Item #B.

B. With the black plastic box still open, remove the wires connected to terminals #6 and #7.

OVERLOAD SYSTEM / ANTI-2-BLOCK TROUBLE SHOOTING GUIDE

1. Short between the terminals #6 and #7 with a screwdriver blade. The relay should "click" after approximately 2 seconds. When the blade is removed, the relay should reset in approximately 2 seconds.

   i. Operating correctly as above would mean the Solid State Timer is operating properly.

   ii. If the SS Timer does not operate as above replace the SS Timer.

5 **BE SURE TO RE-CONNECT ALL WIRES BEFORE FINAL TESTING!**

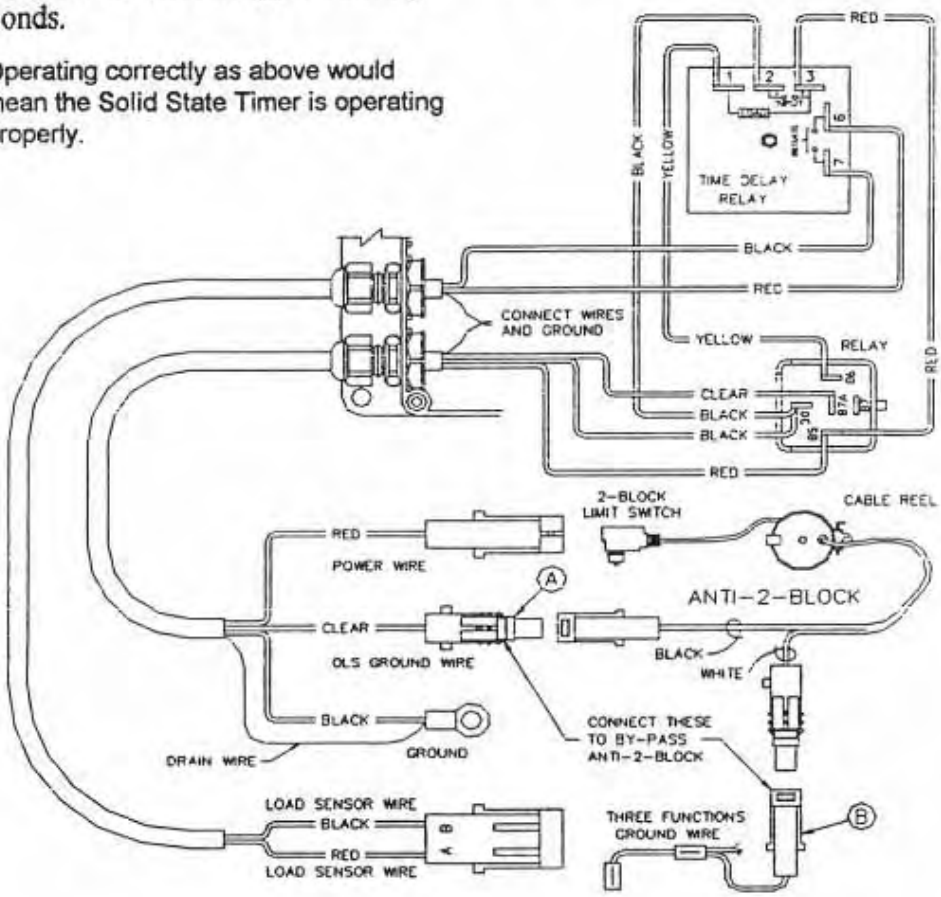

OVERLOAD SYSTEM, ANTI-2-BLOCK
TROUBLE SHOOTING GUIDE
Figure 1

OPERATING PRINCIPAL: The three functions have their ground wires passing through the normally closed contacts on the relay. The ground of the relay coil is connected to the #1 terminal on the Solid State Relay. By connecting terminal #6 and terminal #7 the timing is initiated and the SS Timer "times out" (1 3/4 seconds) and connects terminal #1 to terminal #2. Terminal #2 is grounded, which grounds the relay coil and opens the normally closed contacts. This breaks the ground side of the circuit for the three valve functions. The SS Timer takes 1 3/4 seconds to reset after the initiation circuit is opened.

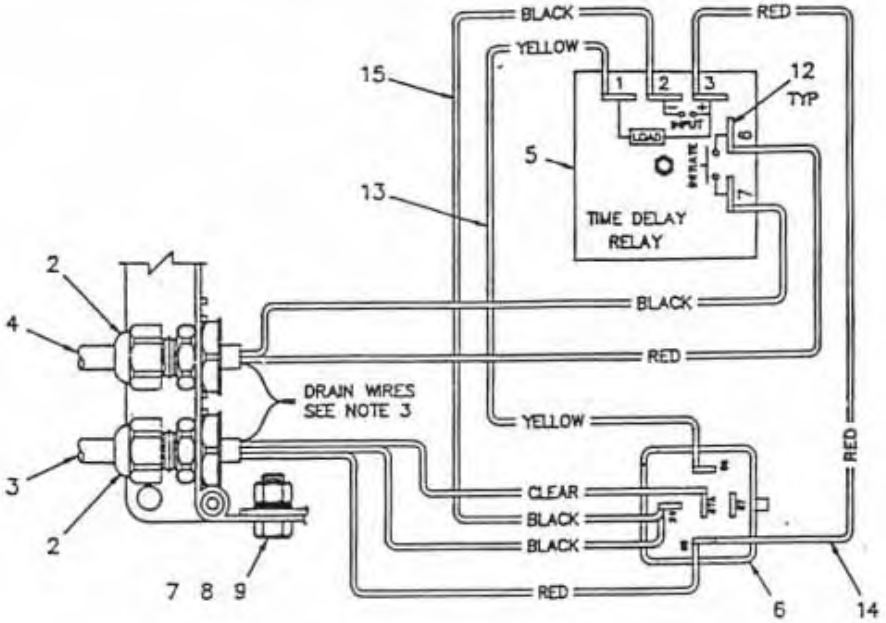

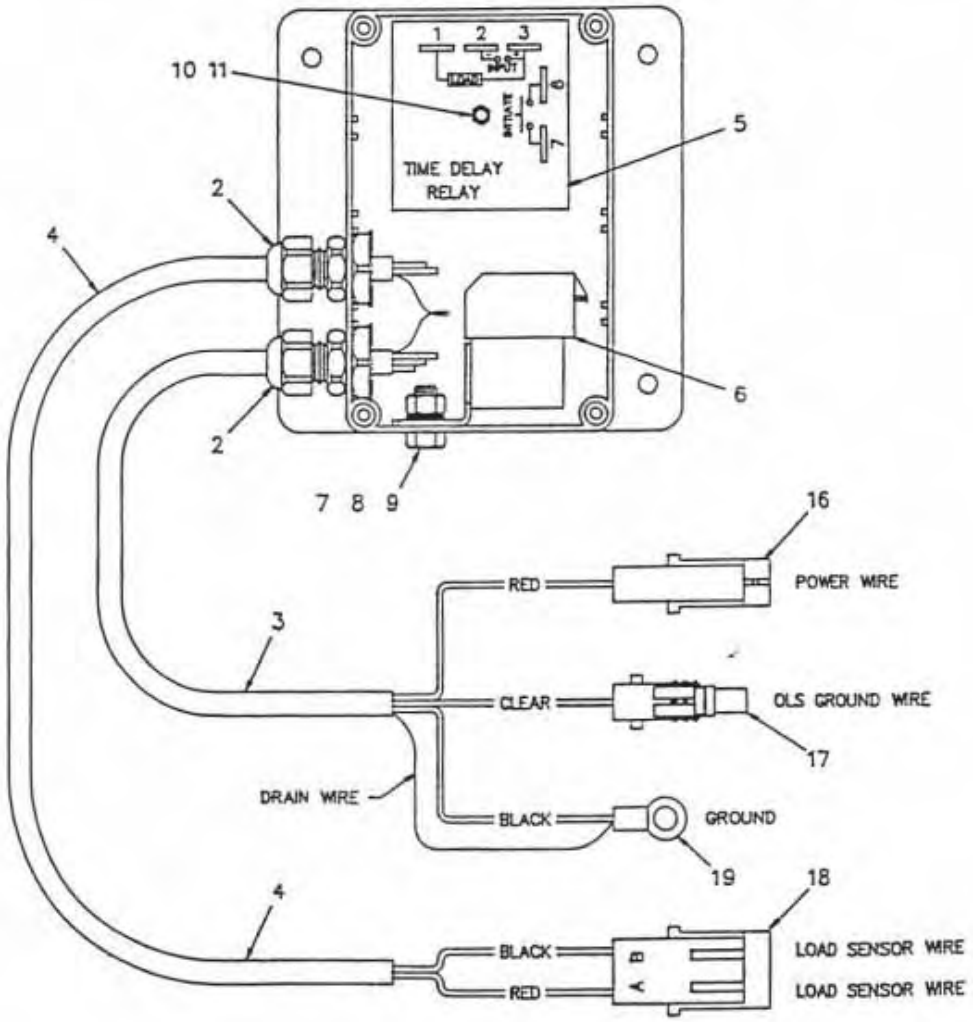

AW-366986
RELAY BOX ASSEMBLY

AW-366986, RELAY BOX ASSEMBLY

ITEM	QTY.	PART NO.	DESCRIPTION
1	1	366985	ENCLOSURE, PLASTIC
2	2	366968	CONNECTOR, CORD
3	5'	366967	CORD, 3-WIRE 18 AWG WITH DRAIN
4	5'	366966	CORD, 2-WIRE 22 AWG WITH DRAIN
5	1	320351	RELAY, SOLID STATE TIMING
6	1	320355	RELAY, DROP OUT
7	1	005901	SCREW, HX HD 1/4-20NC X 1/2 LG.
8	1	020200	WASHER, SP LK 1/4
9	1	015900	NUT, HX 1/4-20NC
10	1	000602	SCREW, ROUND HD #6-32NC X 1 LG.
11	2	015400	NUT, HX #6-32NC
12	7	000405	TERMINAL FLAG
13	1	366978	CONDUCTOR ASSEMBLY (YELLOW)
14	4"	800566	WIRE, RED 18 AWG 600V
15	4"	800568	WIRE, BLACK 18 AWG 600V
16	1	366248	CONN. ASSY WEATHER PACK 1-WAY MALE 18-20
17	1	366249	CONN. ASSY WEATHER PACK 1-WAY FEMALE 18-20
18	1	366250	CONN. ASSY WEATHER PACK 2-WAY MALE 18-20
19	1	000601	TERMINAL, RING 10-3/8
20	3	750737	TIE, CABLE

OPTIMETER TROUBLE SHOOTING GUIDE
STIFF BOOM CRANES

FOLLOW THE TROUBLE SHOOTING SEQUENCE

1 Obtain the proper wiring diagram and check wiring.

2 With truck running, check terminal "l" voltage.

A. If 12 - 13.75 volts, proceed.

B. If not, check for blown fuse or broken wires.

3 Install pendant, turn system power on (eight (8) switch pendants only), and check terminal "t" for truck voltage.

A. If truck voltage, proceed.

B. If no voltage or low voltage (less than truck voltage), make sure the power switch on the eight (8) switch pendant is in the "on" position. (Does not apply to four (4) switch pendant.)

C. Then, check for loose connection in the pendant or a broken wire in the pendant cable.

4 Disconnect bullet connector on line connecting green wire from amplifier to brown wire from proportional valve din connector. Then ground brown wire to a chassis ground. This will send maximum current thru proportional valve and should close it completely.

OR

5 Depress the manual operator pin on top of the valve with an allen wrench till valve closes completely.

6 Check for proper crane operation.

A. If crane operates properly, proceed.

B. If not, check coil resistance from pin to pin (should be 5.0 ohms) and from pin to ground ring on coil (should be infinite resistance). If resistance is much different than above, replace coil, then proceed.

C. Re-connect brown and green wire.

7 Check terminal "m" for 0.5 volts w/trigger released

A. Solid truck voltage at terminal "m" means a loss of ground. Search the ground wire for bad connections or breaks and repair.

B. If more than 0.7 volts or less than 0.2 volts w/trigger released, readjust trigger on pot shaft. (Note: care must be taken when handling the pot assembly to keep from breaking the wires at their attachment points.)

C. If voltage is correct w/trigger released, smoothly activate trigger looking for a smooth, gradual increase of voltage to near 5.0 volts at maximum pulled position (3.5 to 7 volts is OK).

D. If voltage is erratic and jumps up to truck voltage and back down during the trigger movement, replace potentiometer assembly.

OPTIMETER TROUBLE SHOOTING GUIDE
STIFF BOOM CRANES

8 Pull trigger and check for red light inside amplifier then perform the following adjustments with the trigger pulled to the maximum position:

A. Light off

- Turn small trim pot screw ccw (left) till light just gets bright, then stop. (if 10 turns do not turn light on, look for more than 9 volts at term "m")

B. Light on

- Turn small trim pot screw cw (right) till light just turns off, then turn ccw (left) till light just gets bright, then stop. (If 10 turns do not turn light off, look for less than 1 volt at term "m")

9 Release trigger.

10 Set two adjustment switches (hi & lo) to number "4". (One side of the switch knob has an indicator)

11 The *LO* switch takes the "dead space" out of the beginning trigger activation, and will continue to raise the low signal to give half flow with the trigger at full released position. The higher the number or letter (0 thru f), the higher the flow to the crane with the trigger in the fully released position.

12 The *HI* switch takes the "dead space" out of the full trigger position, and will continue to lower the high signal to half the flow at the maximum trigger pulled position. The higher the number or letter (0 thru f), the lower the flow to the crane with the trigger in the fully pulled position.

13 A good starting position would be to have both switches on the number "4".

NOTE: Both switches on "F" will limit flow to a median value and not allow any change.

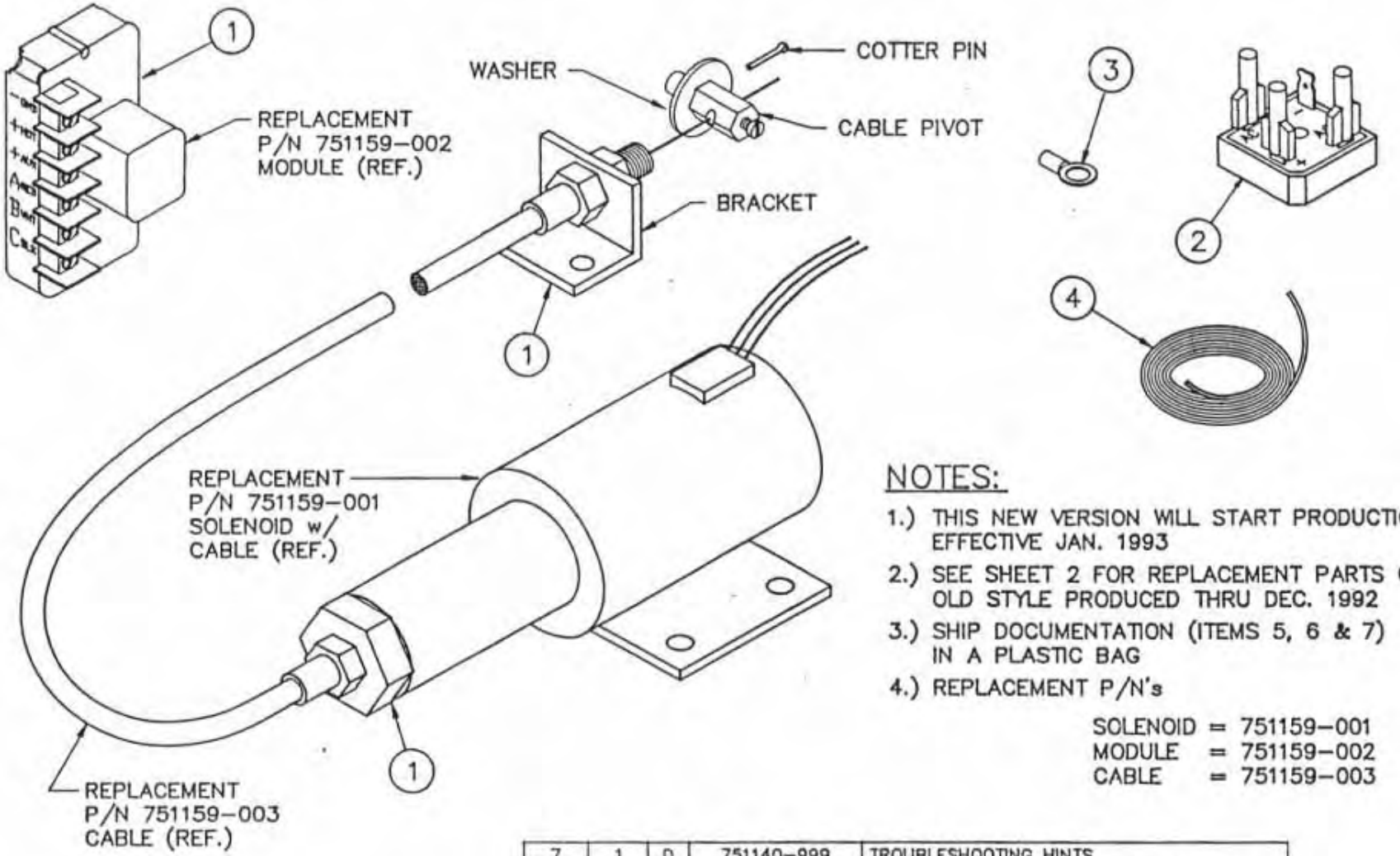

NOTES:

1.) THIS NEW VERSION WILL START PRODUCTION EFFECTIVE JAN. 1993

2.) SEE SHEET 2 FOR REPLACEMENT PARTS OF OLD STYLE PRODUCED THRU DEC. 1992

3.) SHIP DOCUMENTATION (ITEMS 5, 6 & 7) IN A PLASTIC BAG

4.) REPLACEMENT P/N's

SOLENOID = 751159-001
MODULE = 751159-002
CABLE = 751159-003

ITEM	QTY	D/S	PART No.	DESCRIPTION
7	1	D	751140-999	TROUBLESHOOTING HINTS
6	1	D	751140-999	INSTALLATION INSTRUCTIONS (2 PAGES)
5	1	D	751140-999	WIRING DIAGRAM (AW751140)
4	15'	A	800603-009	WIRE, 16 Ga WHT w/ BLK TRACER x 15' LG
3	8	A	000101	TERMINAL, RING #6
2	1	A	751143-001	ISOLATOR MODULE ASSEMBLY
1	1	B	751159	12 VDC SOLENOID w/ CONTROL MODULE

AW-180
THROTTLE SOLENOID ASSY

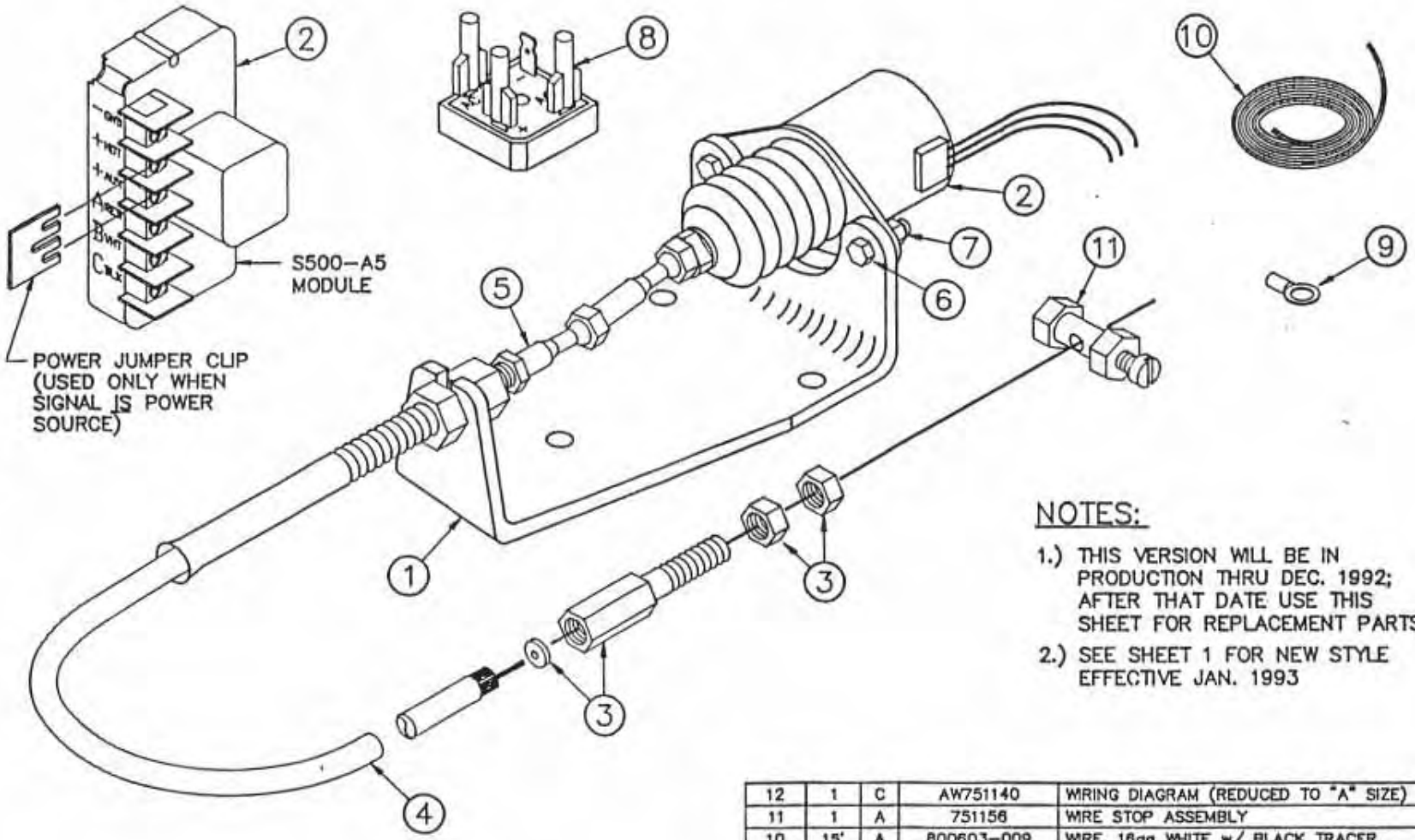

NOTES:

1.) THIS VERSION WILL BE IN PRODUCTION THRU DEC. 1992; AFTER THAT DATE USE THIS SHEET FOR REPLACEMENT PARTS

2.) SEE SHEET 1 FOR NEW STYLE EFFECTIVE JAN. 1993

ITEM	QTY	D/S	PART No.	DESCRIPTION
12	1	C	AW751140	WIRING DIAGRAM (REDUCED TO "A" SIZE)
11	1	A	751156	WIRE STOP ASSEMBLY
10	15'	A	800603-009	WIRE, 16ga WHITE w/ BLACK TRACER
9	8	A	000101	TERMINAL WIRE #6
8	1	A	751143-001	ISOLATOR MODULE ASSY
7	2	A	016300	NUT, HX-LOCK 1/4-20NC
6	2	A	005500	SCREW, HX HD 1/4-20NC x 3/4 LG
5	2	A	751137	BALL JOINT, STRAIGHT
4	1	A	751148	THROTTLE CABLE
3	1	A	751149	BULKHEAD FITTING
2	1	B	751141	12 VDC SOLENOID w/ CONTROL MODULE
1	1	C	751146	BRACKET, THROTTLE SOLENOID

AW-180
THROTTLE SOLENOID ASSY

THROTTLE CONTROL SOLENOID INSTALLATION

LOCATION

Follow these simple rules to properly locate your throttle control kit:

1 Mount the solenoid off the engine but within 46 inches of the throttle lever, to avoid engine vibration and high temperature components (more than 257 °F [125 °C]).

2 Mount control module out of the engine compartment if possible. If not possible, mount the module as far away from high temperature components as possible. Maximum temperature range is 185 °F (85 °C).

3 Route the flexible cable away from high temperature (220° F [105° C]) components such as exhaust manifolds.

4 Avoid sharp bends in flexible cable. Bends should form a smooth arc (360° maximum) with a radius of 5 inches minimum.

CONTROLLING THE SOLENOID THROTTLE KIT

The throttle kit can be controlled remotely by applying a low current 12 VDC signal to the module "AUX" terminal.

Examples of activating signals are an air compressor pressure switch or a crane "dump valve" coil.

MOUNTING PROCEDURES

Use the following procedure to mount your throttle controller:

1 Mount the solenoid and control module according to the recommendations in the "LOCATION" instructions.

2 Electrically connect the solenoid to the control module and power source according to the wiring diagram.

3 Mount the cable bracket and fasten the cable sheath to the bracket using the collar nut so the sheath does not turn during idle adjustment.

SET HIGH ENGINE IDLE SPEED NOTE:

Do not leave the aluminum adjustment nut tight against the solenoid body since this does not allow the cable to float.

1 Make sure the jam nut is loose and turn the aluminum adjustment nut clockwise until the high engine idle speed is reached.

2 Tighten the jam nut.

3 Check the throttle speed controller operation by rechecking the "normal" engine idle speed with the solenoid de-activated and the high engine idle speed with the solenoid activated.

SYSTEM OPERATION

The control module allows the solenoid to operate as a continuous duty device. When the module is wired as recommended, applying 12 VDC to the "AUX" terminal applies voltage to the hold-in and pull-in coil of the solenoid. After 0.5 to 0.75 seconds, power is automatically removed from the pull-in coil. Power will remain at the hold-in coil

THROTTLE CONTROL SOLENOID INSTALLATION

until the 12 VDC signal is removed from the "AUX" terminal.

WARNING !! To avoid control module damage, always disconnect the module when you jump-start the vehicle with voltages that exceed 32 VDC.

TROUBLESHOOTING HINTS

If solenoid will not engage, check the following:

1 Check the stranded pull cable for damage (e.g., melted or crimped sheath)

2 Check the stranded pull cable for binding.

3 Check system voltage at the "+HOT" and "+AUX" terminals.

4 Check module terminals for proper voltage and operation. If the module does not meet the specifications shown below, replace it.

GND	Chassis Ground
+HOT	12 VDC at all times
+AUX	12 VDC required to activate solenoid
A RED	12 VDC when signal is present at "AUX" terminal
B WHT	12 VDC for 0.5 to 0.75 seconds after signal at "AUX" terminal is present
C BLK	Common for solenoid

CONTROL MODULE VOLTAGE MEASUREMENTS

5 Check solenoid resistance (remove wires from module). If resistance is not within specifications listed below, replace the solenoid.

A. White to Black wire - 0.17 ohms

B. Red to Black wire - 13 ohms

6 Make sure you have used the recommended wire length and gage (refer to the chart on AW751140)

7 Be sure cable is not bent beyond guidelines.

8 Check for proper adjustments.

9 Contact Auto Crane Company if you are unable to resolve the problem.

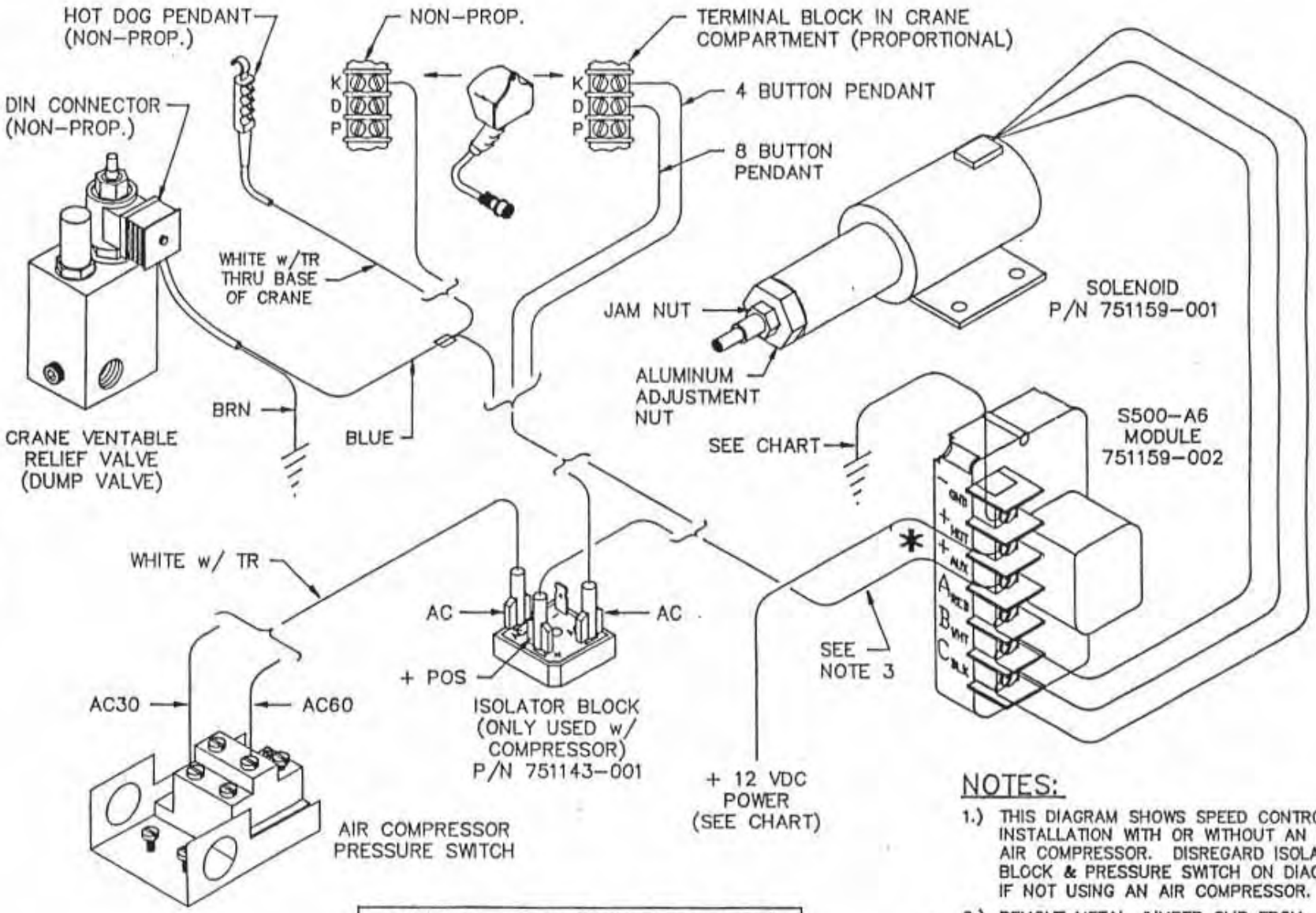

MAXIMUM TOTAL WIRE LENGTH (ft) Total of "-GND" and "+HOT" wire length plus "B WHT" and "C BLK" wire length.				
	12 Ga	10 Ga	8 Ga	6 Ga
12VDC	10 ft	15 ft	25 ft	40 ft

NOTES:

1.) THIS DIAGRAM SHOWS SPEED CONTROL INSTALLATION WITH OR WITHOUT AN AIR COMPRESSOR. DISREGARD ISOLATOR BLOCK & PRESSURE SWITCH ON DIAGRAM IF NOT USING AN AIR COMPRESSOR.

* 2.) REMOVE METAL JUMPER CLIP FROM CONTROL MODULE IF SO EQUIPPED (S500-A5)

3.) THE WIRE SIZE AND LENGTH TO "AUX" TERMINAL OF THE CONTROL MODULE IS NOT CRITICAL BECAUSE OF LOW CURRENT; 16-18 GAGE WIRE MAY BE USED.

NOTES

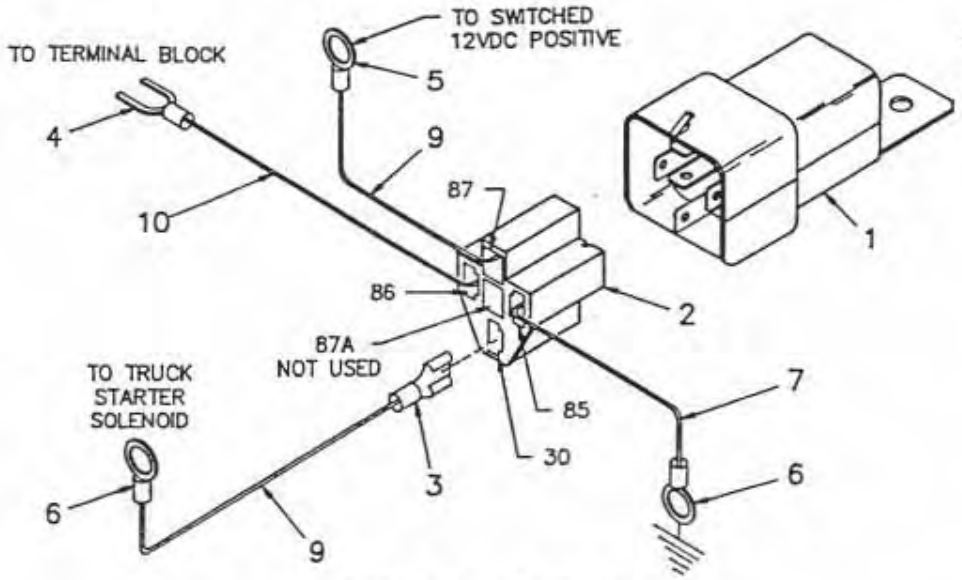

ENGINE START RELAY

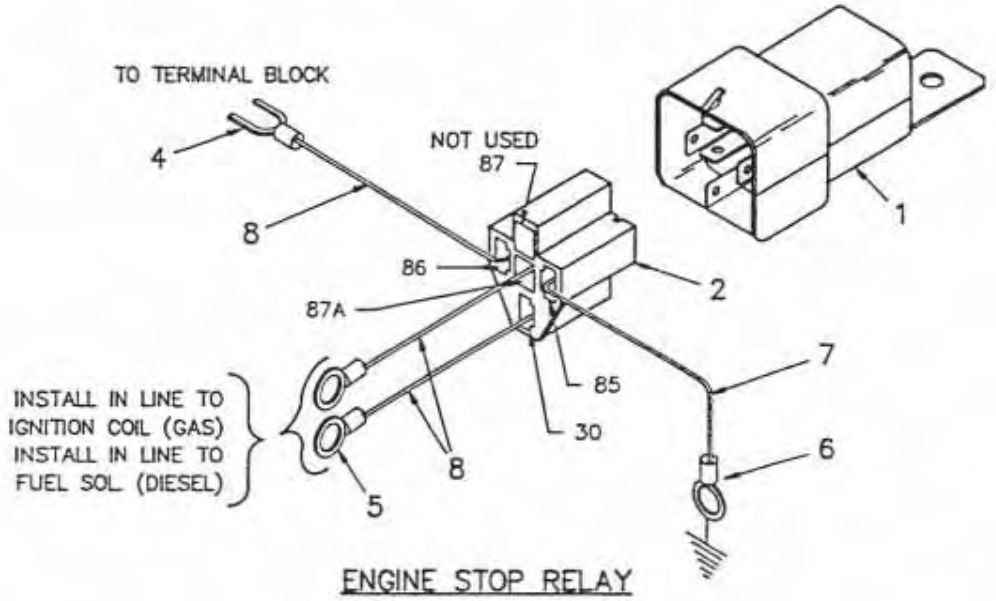

ENGINE STOP RELAY

ITEM	QTY	P/N	DESCRIPTION	ITEM	QTY	P/N	DESCRIPTION
1	2	320355	RELAY, 12V	6	3	000501	TERMINAL, RING 5/16
2	2	320363	PLUG, RELAY	7	6'	800595	WIRE, 16GA, GREEN
3	10	320357	CONN., FEM SPD LOCK	8	49'	800590	WIRE, 16GA, BLACK
4	2	480495	TERMINAL, FLG'D SPADE	9	17'	800593	WIRE, 16GA, RED
5	3	000402	TERMINAL, RING 1/4	10	35'	800594	WIRE, 16GA, BLUE

AW-480533
RELAY KIT
ENGINE START/STOP

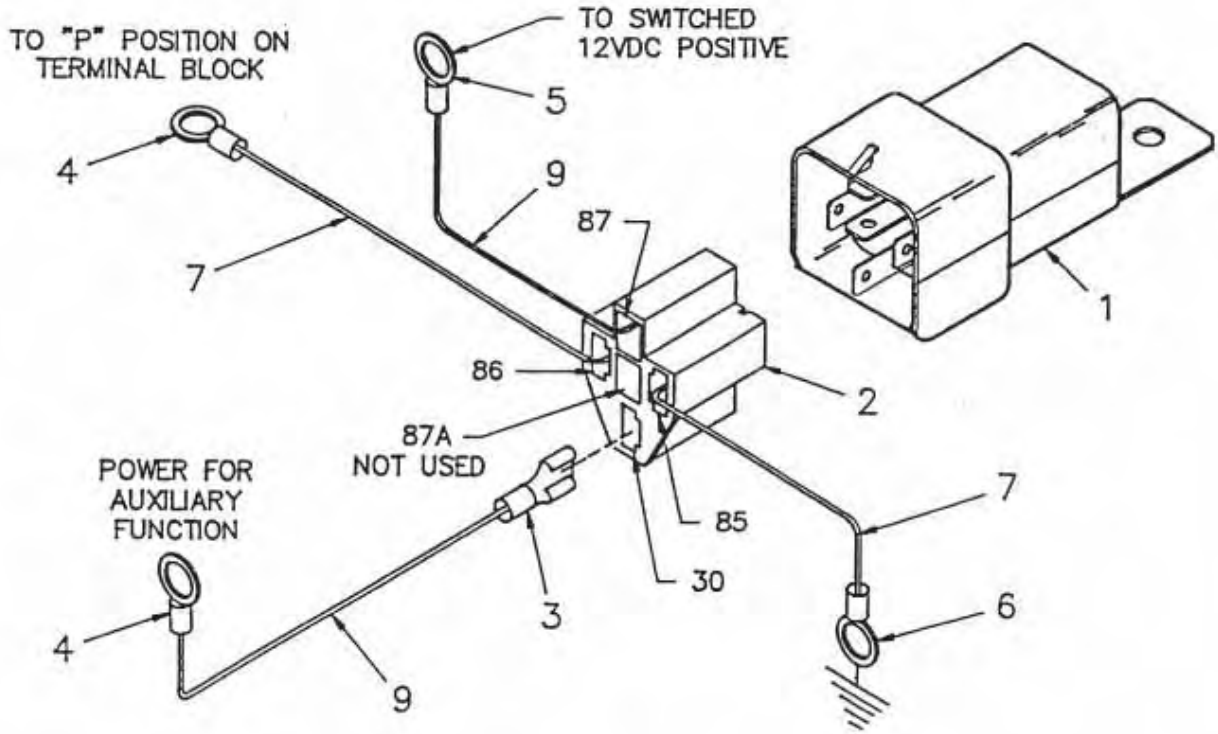

AUXILIARY RELAY

ITEM	QTY	P/N	DESCRIPTION
1	1	320355	RELAY, 12V
2	1	320363	PLUG, RELAY
3	5	320357	CONN., FEM SPD LOCK
4	2	000101	TERMINAL, RING #6
5	1	000402	TERMINAL, RING 1/4

ITEM	QTY	P/N	DESCRIPTION
6	1	000501	TERMINAL, RING 5/16
7	38'	800595	WIRE, 16GA, GREEN
8	10'	800593	WIRE, 16GA, RED
9	25'	800592	WIRE, 16GA, WHITE

AW-480534
RELAY KIT
AUXILIARY

Vented Relief Valve Setting

- **The crane must receive 6 to 7 Gallons Per Minute (GPM) and 2200 psi. To assure proper flow, install an in-line flow meter between the crane and the reservoir in the return hose, or confirm correct pump speed (or engine speed w/ PTO ratio multiplied). Proper pressure setting for units without proportional control can be achieved by, with PTO disengaged, removing the plug, item 5, and installing a 2500 psi gauge. Test the pressure by fully retracting the cylinder and holding Boom-In function while reading the gauge.**

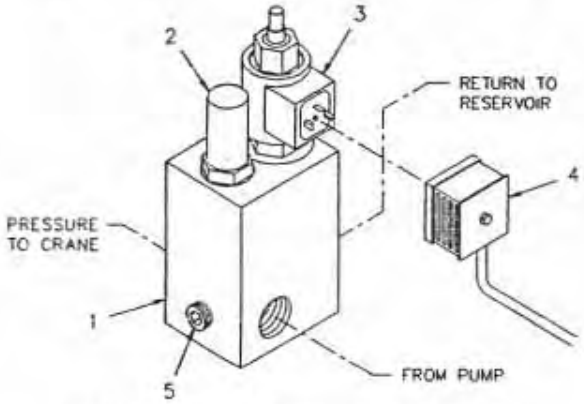

NON-PROPORTIONAL "DUMP VALVE"

- **The boom can now be retracted fully and the switch held in retract position until full pressure is reached and the pressure gauge is checked. If the gauge is not 2200 PSI, adjust the vented relief valve. Verify this setting by operating the retract switch a few times and checking the pressure setting.**
- **Disengage PTO. Remove gauge and re-install the pipe plug. Crane is now ready for use.**

Proportional Relief Valve Setting

- **The crane must receive 6 to 7 Gallons Per Minute (GPM) and 2200 PSI. to assure proper flow, install an in-line flow meter between the crane and the reservoir in the return hose, or confirm correct pump speed (or engine speed w/PTO rotation multiplier).**
- **Proper pressure setting for the proportional control relief valve can be achieved by, with PTO disengaged, removing the plug, -4 SAE,**

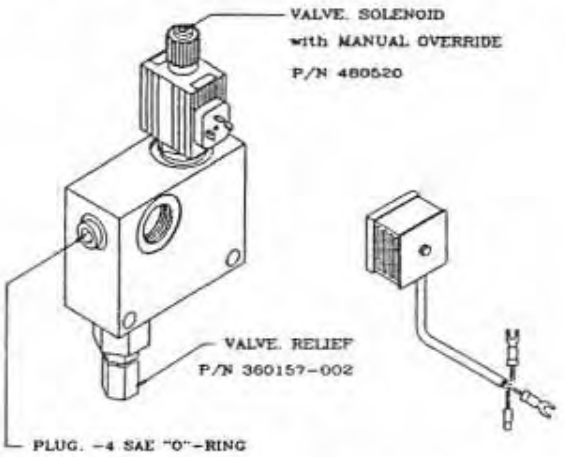

HYDRAULIC MANIFOLD ASSEMBLY
PROPORTIONAL

and installing a 2500 PSI gauge. Test the pressure by pulling the trigger all the way back towards the handle and operating the boom down switch while reading the gauge. Double check the setting by operating the manual override located on the top of the proportional valve (using an Allen wrench or something similar to press the steel button) and simultaneously operate the boom retract function. If the reading is higher, check the proportional system troubleshooting section of this manual to find out why the valve was not fully closing.

- **If it is the same, with PTO disengaged, remove the gauge and re-install the plug. The crane is now ready for use.**

Counterbalance Valve Adjustment

- With PTO disengaged and boom properly supported, remove O-ring plug (item 17) shown on Boom-Up illustration. Install a pressure gauge (0-2500 psi) into the port.
- Engage PTO and insure pump flow is 6 to 7 GPM and main relief is set to 2200 psi. With no load on boom, boom up to an angle of 70 de-

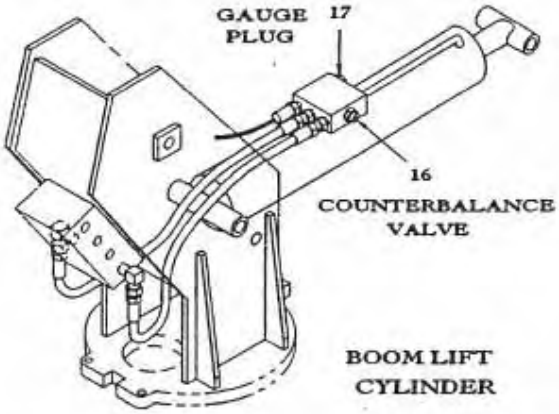

grees. Boom down and note pressure. If pressure reading is not approximately 1200 PSI, the counterbalance valve requires adjustment.

  - To increase the CB valve setting, loosen nut and turn Allen head screw counter clockwise. (Reference item 16, located on the side of the CB valve block towards the right side of the boom.)
  - To reduce the CB valve setting, loosen nut and turn Allen head screw clockwise.
- Tighten nut on adjustment screw and repeat procedure if needed to obtain the proper pressure setting.
- Disengage PTO, remove the pressure gauge and install -6 plug. Crane is now ready for operation.

Notice:

- In an EMERGENCY situation when it becomes necessary to lower the boom without flow present, the CB valve adjustment can be turned in until the boom begins to descend. Make sure the boom will lower onto a proper support. Loosen the lock nut and carefully turn adjustment screw clockwise! Count the number of turns. *Turn slowly until the boom just begins to lower, and remove hand/arm/fingers from crane while boom is lowering.*
- Turning adjustment screw too far will cause valve to come apart on the inside. This condition is not repairable.
- After boom is lowered, turn adjustment screw counter clockwise the approximate number of turns made during lowering procedure. After the problem is corrected, re-adjust the counterbalance valve using the procedure in this manual.

Issue Date: **October, 1994**

Vented Relief Valve Setting

- **The crane must receive 6 to 7 Gallons Per Minute (GPM) and 2350 psi. To assure proper flow, install an in-line flow meter between the crane and the reservoir in the return hose, or confirm correct pump speed (or engine speed w/ PTO ratio multiplied). Proper pressure setting for units without proportional control can be achieved by, with PTO disengaged, removing the plug, item 5, and installing a 2500 psi gauge. Test the pressure by fully retracting the cylinder and holding Boom-In function while reading the gauge.**

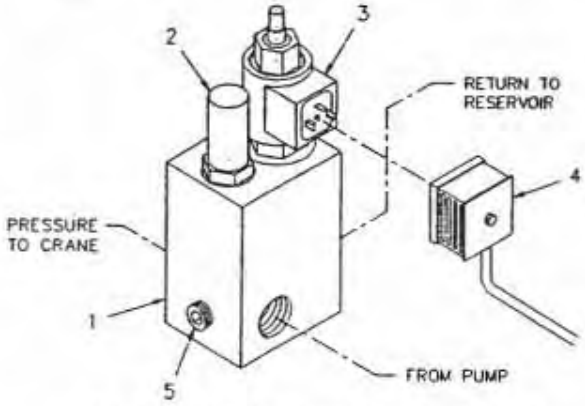

NON-PROPORTIONAL "DUMP VALVE"

- **The boom can now be retracted fully and the switch held in retract position until full pressure is reached and the pressure gauge is checked. If the gauge is not 2350 PSI, adjust the vented relief valve. Verify this setting by operating the retract switch a few times and checking the pressure setting.**
- **Disengage PTO. Remove gauge and re-install the pipe plug. Crane is now ready for use.**

Proportional Relief Valve Setting

- **The crane must receive 6 to 7 Gallons Per Minute (GPM) and 2350 PSI. to assure proper flow, install an in-line flow meter between the crane and the reservoir in the return hose, or confirm correct pump speed (or engine speed w/PTO rotation multiplier).**
- **Proper pressure setting for the proportional control relief valve can be achieved by, with PTO disengaged, removing the plug, -4 SAE,**

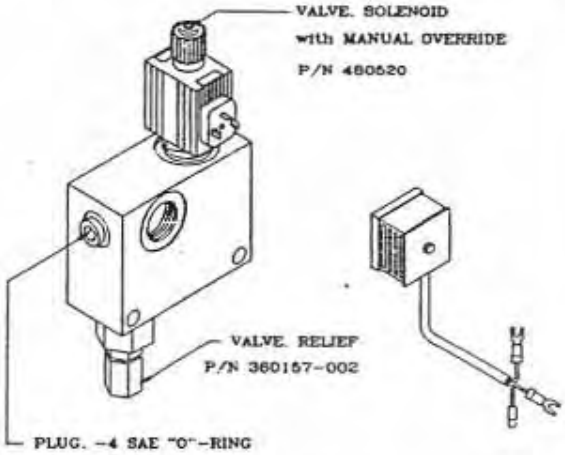

HYDRAULIC MANIFOLD ASSEMBLY
PROPORTIONAL

and installing a 2500 PSI gauge. Test the pressure by pulling the trigger all the way back towards the handle and operating the boom down switch while reading the gauge. Double check the setting by operating the manual override located on the top of the proportional valve (using an Allen wrench or something similar to press the steel button) and simultaneously operate the boom retract function. If the reading is higher, check the proportional system troubleshooting section of this manual to find out why the valve was not fully closing.

- **If it is the same, with PTO disengaged, remove the gauge and re-install the plug. The crane is now ready for use.**

REF.: AW-093 COUNTERBALANCE VALVE ADJUSTMENT, 5005H

Counterbalance Valve Adjustment

- **(Figure 1) With PTO disengaged and boom properly supported, remove pipe plug. Install a pressure gauge (0-2500 psi) into the port.**
- **(Figure 3) Loosen locking set screw on flow regulator valve and turn adjustment knob all the way counter clockwise for maximum flow.**
- **(Figure 4) Remove cap and loosen adjustment nut on relief valve below manifold. Turn allen head adjustment screw all the way clockwise to raise the relief setting to the maximum (DO NOT OVER TIGHTEN).**
- **Engage PTO and insure pump flow is 6 to 7 GPM and main relief is set to 2350 psi. With no load on boom, boom up to an angle of 70 degrees. Boom down and note pressure. If pressure reading is not 550 - 600 PSI, the counterbalance valve requires adjustment (Figure 4).**
  - **To increase the CB valve setting, loosen nut and turn Allen head screw counter clockwise.**
  - **To reduce the CB valve setting, loosen nut and turn Allen head screw clockwise.**
- **Tighten nut on adjustment screw and repeat procedure if needed to obtain the proper pressure setting.**

Notice:

- **In an EMERGENCY situation when it becomes necessary to lower the boom without flow present, the CB valve adjustment can be turned in until the boom begins to descend. Make sure the boom will lower onto a proper support. Loosen the lock nut and carefully turn adjustment screw clockwise! COUNT THE NUMBER OF TURNS. *Turn slowly until the boom just begins to lower, and remove hand/arm/fingers from crane while boom is lowering.***
- **Turning adjustment screw too far will cause valve to come apart on the inside. This condition is not repairable.**
- **After boom is lowered, turn adjustment screw counter clockwise the approximate number of turns made during lowering procedure. After the problem is corrected, re-adjust the counterbalance valve using the procedure in this manual.**

Relief Valve (Fig 4) Setting

- **With PTO disengaged and boom properly supported, remove cap from pressure gauge fitting and install a 0-2500 psi pressure gauge.**
- **Close flow regulator valve by turning adjustment knob all the way clockwise (Figure 3). CAUTION: DO NOT OVER TIGHTEN!**
- **With no load on boom, boom up to an angle of 70 degrees. Boom down and note pressure. If pressure reading is not 750 - 800 PSI, the pressure relief valve requires adjustment (Figure 4).**
  - **With cap removed from allen head adjustment screw, loosen the adjustment nut.**
  - **To increase the pressure relief setting, turn the Allen head adjustment screw clockwise.**
  - **To decrease the pressure relief setting, turn the allen head adjustment screw counterclockwise.**
- **Tighten nut on adjustment screw, and reinstall cap. Repeat procedure if needed to obtain proper pressure setting.**
- **Disengage PTO, remove pressure gauge and reinstall pipe plug.**

Boom Down Speed Setting

- **(Figure 3) Engage PTO and insure pump flow is 6 to 7 GPM and main relief is set to 2350 psi. With no load on boom, boom up to an angle of 75 degrees. Boom down and adjust the flow regulator adjustment knob to achieve a boom down time of 37 seconds from 75 to 0 degrees.**
  - **To increase boom down speed, turn adjustment knob counterclockwise.**
  - **to decrease boom down speed, turn adjustment knob clockwise.**
  - **Use locking set screw on adjustment knob to hold desired position.**

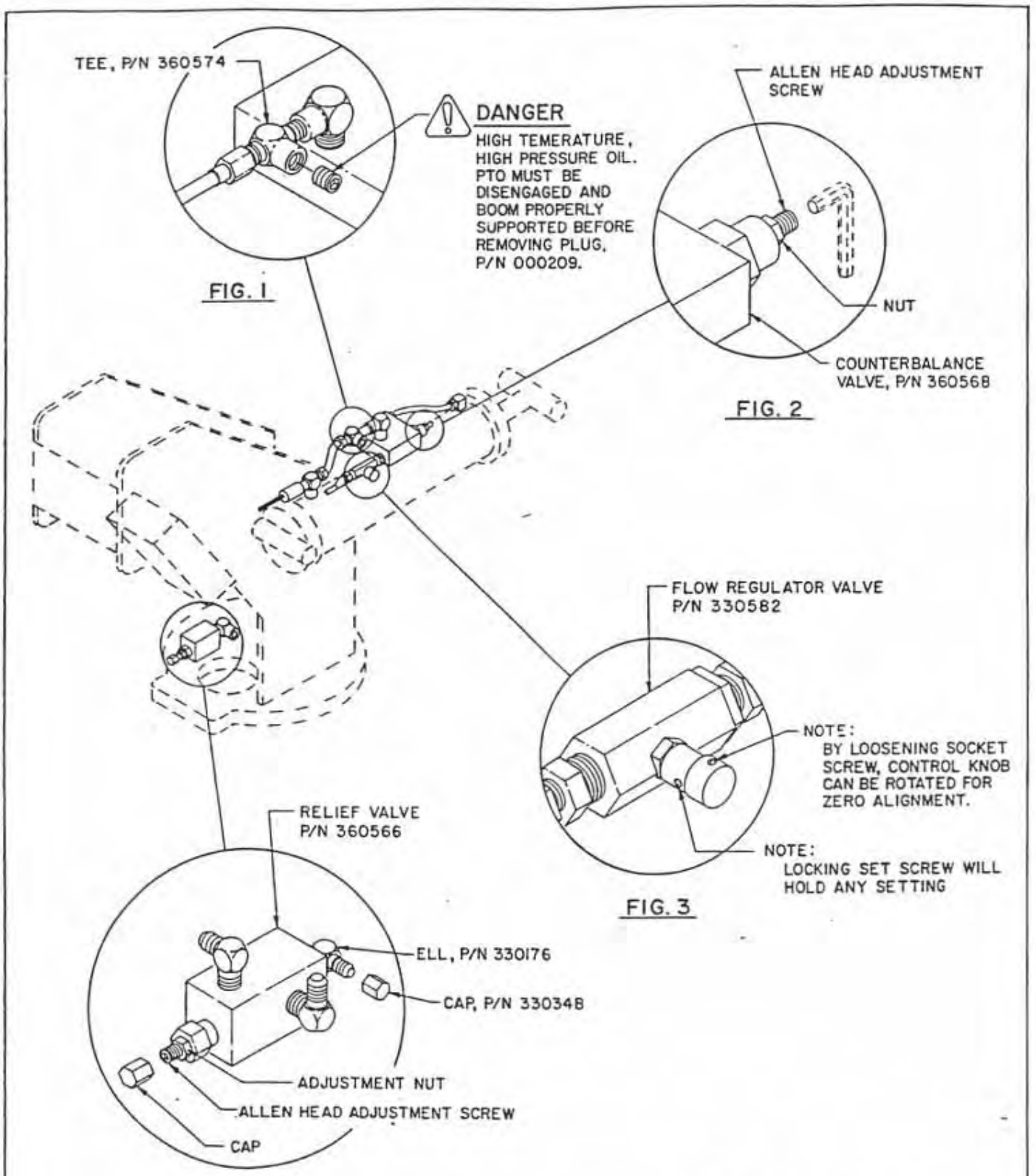

AW-093
COUNTERBALANCE VALVE
ADJUSTMENT, 5005H

NOTES

HYDRAULIC TROUBLESHOOTING 5005H

Issue Date: **October, 1994**

CAUTION: Never check for hydraulic leaks by feeling around hoses, fittings, or any other components. High pressure oil can be injected through the skin causing severe injury, or death.

The hydraulic system of the 5005H power version is electrically operated and requires a minimum of 12V for satisfactory performance. The hydraulic pump is bi-rotational with a pressure relief setting of 2200 psi (2350 psi for 16' manual.). Standard pump speed is 1000 RPM (Ref. Pump P/N 360029). This pump is for direct flange mounting only. It is not to be shaft driven unless an outboard bearing is installed, Auto Crane Kit P/N 480006.

PROBLEM	SOLUTION
FLOW PRESENT BUT FUNCTION WILL NOT WORK	Remove valve cover to gain access to the manual override on the end of the valve cartridge. If the pump is operating, operate the relief valve manual override or the proportional valve override and push and twist (CCW) the directional control valve manual override to unlock, then pull to operate the function. If the function does operate, check for loose wire, low voltage or bad ground. If the problem is traced to no voltage at the valve cartridge, remove pendant and with the switch engaged, check for an open circuit with an ohmmeter. If the circuit is open, check for broken wiring or bad switch. If the function does not operate, see the "NO FLOW" paragraph in this section.
HYDRAULIC "CHATTER"	When a hydraulic function is engaged and causes the crane to "chatter", check for loose wire, low voltage at valve cartridge, low pump pressure, or air in the system.
NO FLOW OR LIMITED FLOW TO CRANE	Check for adequate oil supply in reservoir. Check operation of bypass system by pressing manual override on solenoid valve operator on vented relief valve or proportional valve while operating crane. If crane functions, check for 12V at vented relief valve solenoid when operating a function, or follow proportional trouble shooting procedure for the proportional valve. If low flow condition continues to exist when the manual override is operated, remove relief valve cartridge and check for dirt. Other possible causes for a low flow condition are: 1. Engine speed is too slow. 2. A blocked pressure hose from pump. This condition can be identified by excessive lugging of engine and rapid overheating of oil. 3. Collapsed or blocked suction hose to pump. This condition is usually identified by pump cavitation noise. 4. Bad pumps: a bad pump will usually have some flow but the flow will drop off rapidly as pressure increases. This condition will cause overheating of the system. A drop of four (4) or more GPM from Zero (0) PSI to Two Thousand (2000) PSI is cause for pump investigation

HYDRAULIC TROUBLESHOOTING 5005H

Issue Date: **October, 1994**

PROBLEM	SOLUTION
NO PRESSURE OR TOO LOW PRESSURE	Check the sight gauge and maintain an adequate oil level in reservoir. Make sure pressure gauge is functioning correctly. Possible relief valve stuck open. Check for excessive leakage and correct. Check to ensure that pressure limit switch is correctly set.
TOO HIGH FLOW	Make sure pump size is correct and pump speed is not too fast (Consult manufacturer's data sheet). Check or replace flow control. Check components for flow displacements. High flow may cause erratic valve operation.
TOO HIGH PRESSURE	Make sure pressure relief valve is correctly set.

CAUTION

The Auto Crane 5005H series cranes are manufactured with a standard overload protection system to prevent structural damage to the crane. When the crane load rating is exceeded, main boom down, extend out, and hoist up will not function. These operations cannot be used again until the load on the crane is reduced. Also, the main boom elevation will be limited in it's operation as the crane becomes overloaded. Attempting to raise the main boom with a load greatly exceeding the crane rating will open the main relief valve resulting in no boom movement. This problem can be resolved by moving the load closer to the crane pedestal, or reducing the load.

WIRE LINE LUBRICATION

Lubrication of the wire line serves two important purposes: (1) helps to prevent corrosion; (2) lubricates the cable strands to reduce wear due to flexing and abrasion caused by contact with the sheaves, rollers, and cable on the drum.

PREPARATION:

Remove rust and foreign matter with a wire brush and wipe clean. Be sure cable is dry.

APPLICATION:

Two methods are illustrated in figures 1 and 2. A light weight motor oil may be used, as in figure 1; or a heavier lubricant such as grease gun lubricant, as in figure 2.

Illustrated in figure 1 is one easy and effective method of applying lubrication. Dip the brush into the lubricant and apply. In some cases a rag or piece of sheepskin is dipped in the lubricant and used to swab the lubricant on to the rope.

Another simple method is shown in figure 2. Leather gloves are preferred to canvas because of greater protection and less penetration of the grease.

Fig. 1

Fig. 2

"LIFE OF WIRE LINE"

So many variable factors can cause the deterioration of wire line cable that it is not possible to determine a definite life expectancy.

Some of these factors are:

1. Load being handled.
2. Corrosive conditions.
3. Maintenance of the unit.
   a. Keep the sheaves turning freely.
   b. Maintain tension of cable to insure proper spooling.
   c. Lubricate line (See above).
   d. Avoid kinks in cable.
   e. Avoid abrasive action and contact with sharp corners.
4. Frequency of use.

Auto Crane units, up to 5000 pound ratings, use 5/16 inch diameter galvanized preformed 7 x 19 aircraft cable which, when new, has a minimum strength of 9,800 pounds. It is recommended when 2500 pound loads are exceeded to use a two-part line with a traveling block. It can be seen that there is a safety factor of 3.9 to 1 when the cable is new.

Keeping the above factor of safety in mind and knowing the kind of loads that will be handled, the user can determine by inspection of the cable as to when it should be replaced.

Items to look for while inspecting the cables are:

1. Broken strands
2. Kinks and flattened sections.
3. Corrosion and abrasion.

LUBRICATION & MAINTENANCE SCHEDULE 5005H CRANE

SERVICE PERFORMED	DAILY	WEEKLY	3 MONTHS	6 MONTHS	1 YEAR	NOTES
LOAD HOOK	X					INSPECT HOOK & LATCH FOR DEFORMATION, CRACKS, & CORROSION
CABLE DRUM	X					MAKE SURE CABLE IS WOUND EVENLY ON DRUM
HOIST CABLE	X					CHECK FOR FLATTENING, KINKS, & BROKEN STRANDS, SEE MANUAL
HYDRAULIC HOSES	X					VISUAL INSPECTION
HYDRAULIC FLUID	X					CHECK FLUID LEVEL
MOUNTING BOLTS		X				CHECK-TORQUE TO 440 FT-LBS (DRY) AS REQUIRED
ROTATION RING GEAR		X				LUBE WITH MOBILTAC LL, OR LUBRIPLATE P/N 15263, OR EQUIV.
SHEAVE BEARINGS		X				SEALED BEARING, REPLACE IF ROUGH OR LOOSE
ALL OTHER BOLTS		X				CHECK-TIGHTEN AS REQUIRED
BOOM PIVOTS		X				GREASE WITH MOBILPLEX EP-2 OR EQUIV @ ZERKS
BOOM CYLINDER		X				CHECK AROUND CYLINDER ROD FOR EXCESS FLUID LEAKAGE
BOOM CYLINDER PINS		X				GREASE WITH MOBILPLEX EP- 2 OR EQUIV @ ZERKS
EXTENSION DETENT PIN		X				LUBE DETENT SPRING & BALL W/ WD-40
RETURN LINE FILTER			X			REPLACE ELEMENT
HI-PRES. FILTER			X			CLEAN AFTER FIRST WEEK, THEN EVERY 3 MONTHS (OPT EQUIP)
ROTATION BEARING			X			GREASE WITH MOBILPLEX EP-2 OR EQUIV @ ZERKS
ROTATION BRNG BOLTS			X			CHECK-TORQUE TO 150 FT- LBS AS REQUIRED
ROTATION GEAR BOX			X			CHECK-TORQUE TO 85 FT-LBS AS REQUIRED
ROTATION GEAR BOX				X		EP GEAR LUBE SAE 140
HOIST GEARBOX				X		WORM GEAR-EP GEAR LUBE SAE 80-90
HYDRAULIC FLUID					X	DRAIN, FLUSH, & REFILL WITH MOBIL DTE 13, OR EQUIV.
BOOM SLIDE PADS						PADS GREASED WHEN REPLACED
FOR ADDITIONAL INFORMATION SEE:					1) 2) 3)	OWNER'S MANUAL OSHA SECTION 1910.180 ANSI B30.5-1989

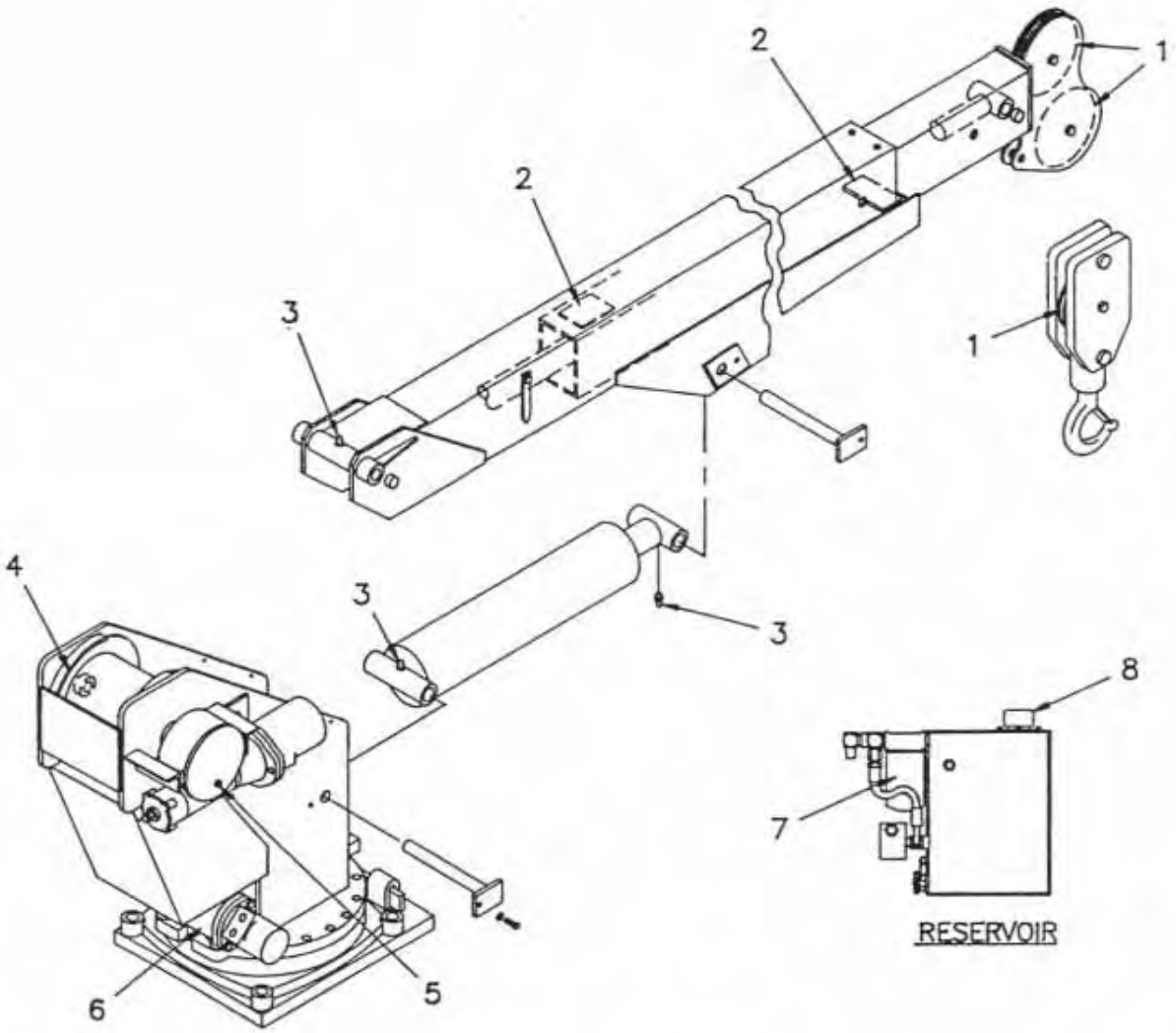

1. SHEAVE ROLLER BEARINGS:
   SEALED TYPE, NO LUBE REQUIRED.

2. BOOM PADS:
   IF REPLACED, GREASE UPON INSTALLATION WITH CHASSIS LUBRICANT.

3. PIVOT POINT GREASE ZERKS:
   LUBE ONCE A WEEK WITH MOBILPLEX EP-2 OR EQUIVALENT.

4. HOIST ROLLER BEARINGS:
   SEALED TYPE, NO LUBE REQUIRED.

5. HOIST ACTUATOR:
   MAINTAIN GEAR BOX LUBRICANT AT FILL PLUG. USE ONE PINT OF EP GEAR LUBE SAE 80-90. REPLACE EVERY SIX MONTHS.

6. ROTATION ACTUATOR:
   MAINTAIN OIL LEVEL OF 1 1/2 PINTS OF EP GEAR LUBE, SAE 140. REPLACE EVERY SIX MONTHS.

7. RESERVOIR FILTER:
   10 MICRON SPIN ON FILTER REQUIRED. REPLACE EVERY THREE MONTHS. SEE RESERVOIR ASSEMBLY FOR PART NUMBER.

8. HYDRAULIC FLUID:
   USE DTE-13 OR EQUIVALENT. KEEP LEVEL AT SIGHT GAUGE. RESERVOIR SHOULD BE FLUSHED AND NEW FLUID ADDED ONCE A YEAR, OR IF A HYDRAULIC FAILURE OCCURS.

AW-024
LUBRICATION MAINTENANCE

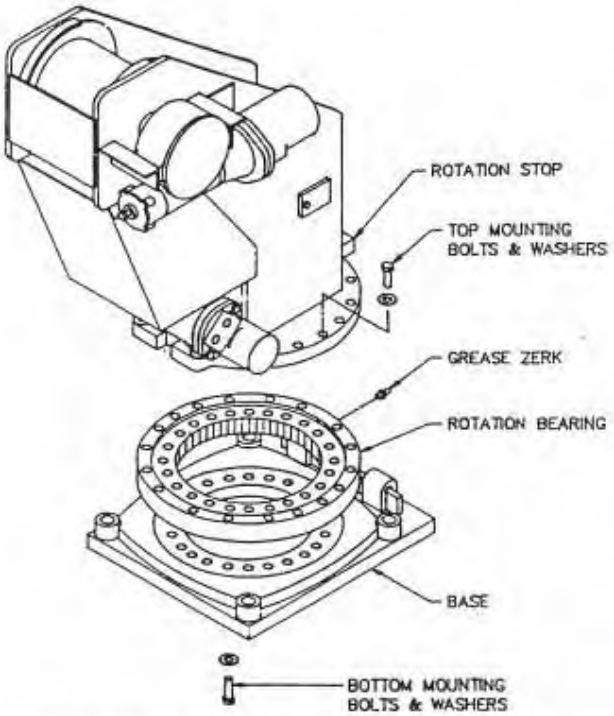

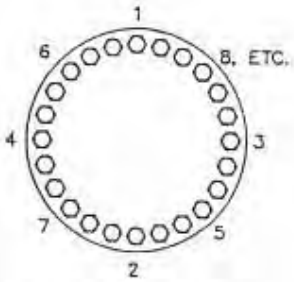

TORQUE SEQUENCE ILLUSTRATION

LUBRICATION OF ROTATION BEARING

RACE

1. LUBRICATE BEARING RACE AT THE GREASE ZERK LOCATED ON THE OUTSIDE OF THE ROTATION BEARING DIRECTLY UNDER THE ROTATION STOP OF THE PEDESTAL.
2. LISTED IN THE CHART BELOW ARE SEVERAL LUBRICANTS WHICH ARE ACCEPTABLE FOR BOTH RUST INHIBITING AND EXTREME PRESSURE CHARACTERISTICS.
   A. LUBRICATE THE BEARING DAILY IF THE CRANE IS USED ON A DAILY BASIS.
   B. LUBRICATE THE BEARING EVERY 30 DAYS IF THE CRANE IS USED INTERMITTENLY.
   C. ROTATE THE BEARING THROUGH TWO OR MORE ROTATIONS DURING LUBRICATION PROCCESS.

GEAR

1. THE CHART BELOW LISTS SEVERAL LUBRICANTS FOR THE GEAR. IT IS RECOMMENDED THAT THE TEETH BE LUBRICATED WITH A SMALL AMOUNT OF GREASE EVERY 8 HOURS IF THE CRANE IS USED DAILY. THE GREASE IS PURGED FROM THE TEETH BY THE VERY NATURE OF BEING EXPOSED TO THE ELEMENTS. THEREFORE CLOSE ATTENTION TO THE GEAR LUBRICANT WILL PROVIDE A LONGER TOOTH LIFE. GREASE THE GEAR TEETH AT THE PINION LOCATION.

INSTALLATION OF ROTATION BEARING

1. MAKE SURE MOUNTING SURFACES ARE FLAT AND CLEAR OF DEBRIS.
2. INSTALL BEARING SUCH THAT THE GREASE ZERK ON THE BEARING IS LOCATED DIRECTLY UNDER THE ROTATION STOP OF THE PEDESTAL.
3. INSTALL TOP AND BOTTOM BOLTS AND FLAT WASHERS. ALL BOLTS MUST BE GRADE 8 AND USED WITH HARDENED FLAT WASHERS. REFER TO PEDESTAL ASSEMBLY FOR PART NUMBERS.
4. SNUG ALL BOLTS , THEN TIGHTEN ACCORDING TO THE TORQUE SEQUENCE ILLUSTRATION UNTIL ALL BOLTS ARE TORQUED TO 150 FT.-LBS (NON-PLATED) OR 110 FT.-LBS (PLATED).

   NOTE: BOLTS SHOULD BE CHECKED PERIODICALLY AND RETIGHTENED TO PROPER TORQUE.
5. GREASE THE ROTATION BEARING ACCORDING TO LUBRICATION INSTRUCTIONS AT LEFT.
6. SET BACKLASH OF THE ROTATION ACTUATOR AND THE ROTATION BEARING AT THE HIGH POINT OF THE ROTATION BEARING GEAR TEETH. IDENTIFIED BY A YELLOW PAINT MARK ON THE TEETH.

	MOBIL	TEXACO	SUNOCO	PURE	SOHIO
RACE	MOBILPLEX EP #2	MARFAC MP #2	PRESTIGE 742EP	POCO HT EP #2	SOHITRAN EP #1
GEAR	MOBILCOTE-S	CRATER COMPOUND	407 COMPOUND B	POCO GEARSHIELD	SOHITAC #1

AW-124
ROTATION BEARING MAINTENANCE

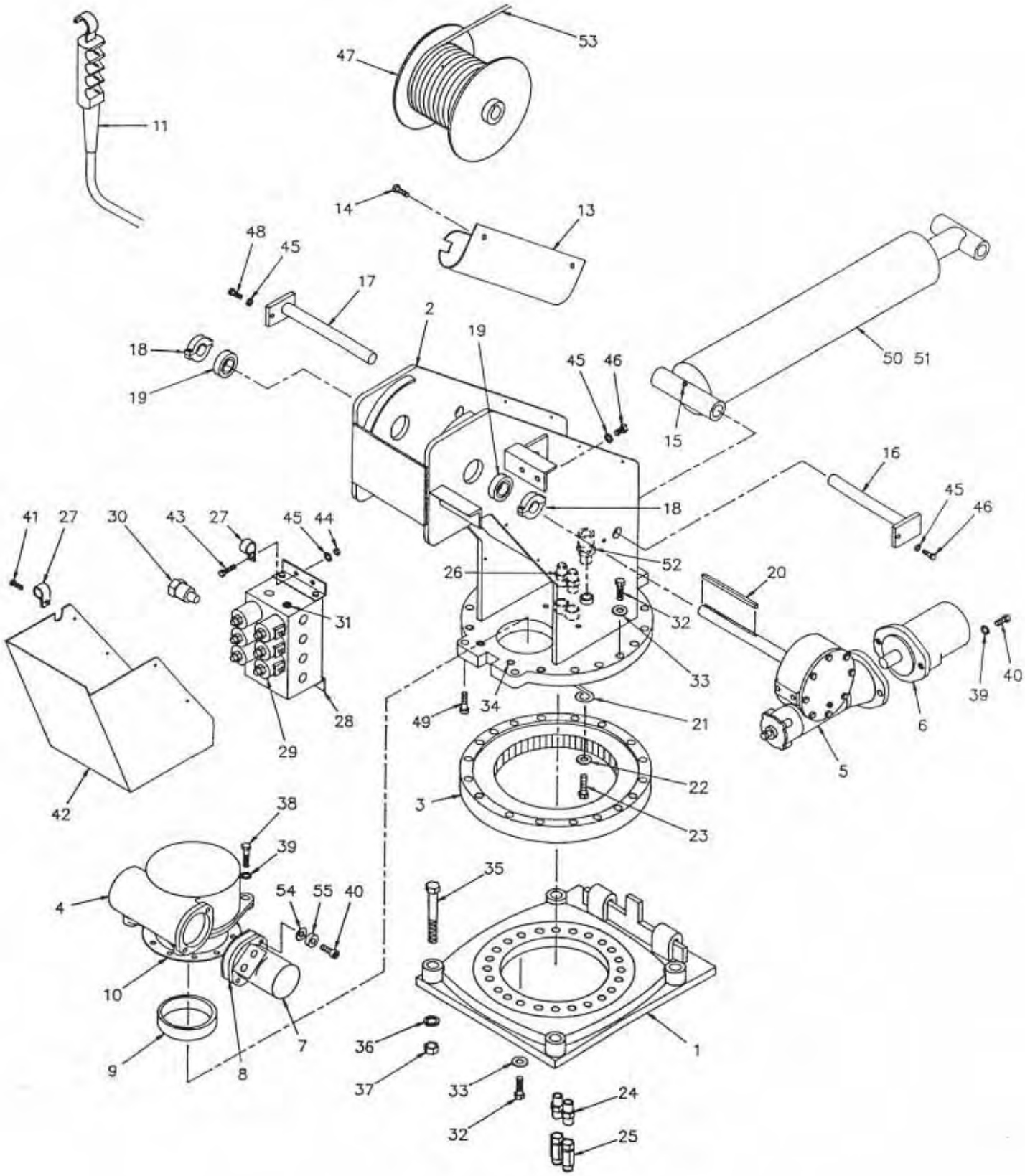

AW–360506
5005H PEDESTAL ASSEMBLY
MANUAL EXTENSION

AW-360506
5005H PEDESTAL ASSEMBLY (MANUAL EXTENSION)

ITEM	QTY.	PART NO.	DESCRIPTION
1	1	360536	BASE PLATE ASSEMBLY
2	1	360615	PEDESTAL WELDMENT
3	1	480023-002	ROTATION BEARING
4	1	480028	GEAR BOX, ROTATION
5	1	480075	ACTUATOR, HOIST
6	1	360199	HYD. MOTOR (HOIST)
7	1	480027	HYD. MOTOR (ROTATION)
8	1	480019	GASKET, MOTOR
9	1	360162	ECCENTRIC RING
10	1	480011	SEAL, ROTATION BOX
11	1	480522	PENDANT, 3 FUNCTION
12	—	—	—
13	1	634000	GUARD, PENDANT
14	2	002615	SCREW, 1/4-20NC X 3/8 SELF-TAPPING
15	2	239000	GREASE ZERK
16	1	360624	PIN, PEDESTAL/CYLINDER
17	1	360625	PIN, LOWER BOOM PIVOT
18	2	330468	COLLAR, SPLIT LOCK
19	2	400500	BEARING
20	1	480094	KEY, 3/8 SQ.
21	1	360207	RETAINER, ECCENTRIC RING
22	1	020600	WASHER, SP. LK. 5/16
23	1	007807	SCREW, HEX HD. 5/16 NC X 3/4 GR.5
24	2	750413	REDUCER, -8 NPT/-6 NPTF
25	2	750412	SWIVEL JOINT, -8
26	2	360054	ADAPTER, -8 NPT/-8 JIC
27	2	480024	MOUNT, PENDANT RETAINER
28	1	480182	MANIFOLD, CARTRIDGE
29	6	480184	VALVE, CARTRIDGE
30	1	480183	CARTRIDGE, FLOW REGULATOR
31	1	000109	PLUG, PIPE 3/8
32	38	012198	SCREW, HEX HD. 5/8 NC X 1 3/4 GR.8
33	38	023902	WASHER, FLAT 5/8 (HARDENED)
34	4	006205	SCREW, SOC. HD. 5/8 NC X 1 1/4 GR.8
35	4	015104	SCREW, HEX HD. 7/8 NF X 5" GR.8
36	4	022200	LOCKWASHER, 7/8
37	4	018900	NUT, HEX 7/8 NF
38	2	011608	SCREW, HEX HD. 1/2 NC X 2" GR.5
39	4	021500	WASHER, SP. LK. 1/2
40	4	012197	SCREW, SOC. HD. 1/2 NC X 1 1/2 GR.5
41	6	002608	SCREW, 1/4-20 X 3/4 S.T. TYPE F
42	1	360544	COVER, VALVE
43	4	008701	SCREW, HEX HD. 3/8 NC X 1"LG
44	4	017100	NUT, HEX 3/8 NC
45	10	021100	WASHER, SP. LK. 3/8
46	5	330370	SCREW, HEX HD. 3/8 NC X 7/8 GR.8
47	1	366180	DRUM, HOIST
48	1	366158	SCREW, HEX HD. 3/8 NC X 3/4 GR.8

AW-360506
5005H PEDESTAL ASSEMBLY (MANUAL EXTENSION)

ITEM	QTY.	PART NO.	DESCRIPTION
49	2	009118	SCREW, SOC. HD. 1/2 NC X 2" GR.5
50	1	360158	CYLINDER, BOOM UP (COMPLETE)
	1	360158-001	CASE ASSEMBLY
	1	360158-002	SHAFT ASSEMBLY
	1	360158-003	HEAD GLAND
	1	360158-004	PISTON
51	1	330604	SEAL KIT
52	1	370433	CABLE, CONNECTOR
53	1	360155	CABLE, HOIST 5/16
55	2	021502	WASHER, SP. LK. 1/2 (HI-COLLAR)
56	2	021601	WASHER, FLAT 1/2 SAE (SPECIAL)

NOTES

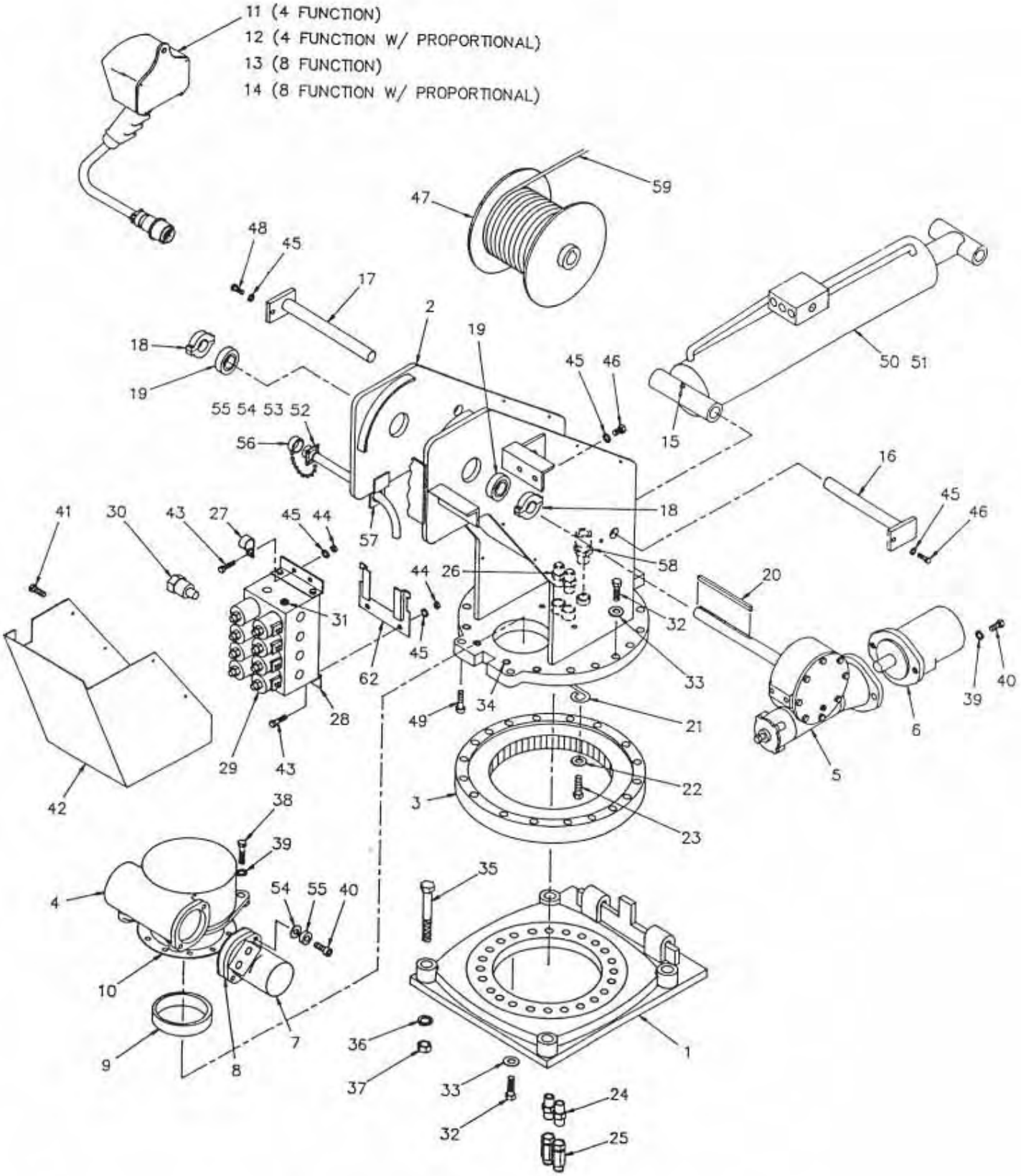

AW–360731
5005H PEDESTAL ASSEMBLY
PROPORTIONAL PENDANT

AW-360731
5005H PEDESTAL ASSEMBLY

ITEM	QTY.	PART NO.	DESCRIPTION
1	1	360536	BASE PLATE ASSEMBLY
2	1	360615	PEDESTAL WELDMENT
3	1	480023-002	ROTATION BEARING
4	1	480028	GEAR BOX, ROTATION
5	1	480075	ACTUATOR, HOIST
6	1	360199	HYD. MOTOR (HOIST)
7	1	480027	HYD. MOTOR (ROTATION)
8	1	480019	GASKET, MOTOR
9	1	360162	ECCENTRIC RING
10	1	480011	SEAL, ROTATION BOX
11	1	480590	PENDANT, 4 FUNCTION
12	1	480591	PENDANT, 4 FUNCTION (WITH PROPORTIONAL)
13	1	480952	PENDANT, 8 FUNCTION
14	1	480593	PENDANT, 8 FUNCTION (WITH PROPORTIONAL)
15	2	239000	GREASE ZERK
16	1	360624	PIN, PEDESTAL/CYLINDER
17	1	360625	PIN, LOWER BOOM PIVOT
18	2	330468	COLLAR, SPLIT LOCK
19	2	400500	BEARING
20	1	480094	KEY, 3/8 SQ.
21	1	360207	RETAINER, ECCENTRIC RING
22	1	020600	WASHER, SP. LK. 5/16
23	1	007807	SCREW, HEX HD. 5/16 NC X 3/4 GR.5
24	2	750413	REDUCER, -8 NPT/-6 NPTF
25	2	750412	SWIVEL JOINT, -8
26	2	360054	ADAPTER, -8 NPT/-8 JIC
27	1	480024	MOUNT, PENDANT RETAINER
28	1	480182	MANIFOLD, CARTRIDGE
29	8	480184	VALVE, CARTRIDGE
30	1	480183	CARTRIDGE, FLOW REGULATOR
31	1	000109	PLUG, PIPE 3/8
32	38	012198	SCREW, HEX HD. 5/8 NC X 1 3/4 GR.8
33	38	023902	WASHER, FLAT 5/8 (HARDENED)
34	4	006205	SCREW, SOC. HD. 5/8 NC X 1 1/4 GR.8
35	4	015104	SCREW, HEX HD. 7/8 NF X 5" GR.8
36	4	022200	LOCKWASHER, 7/8
37	4	018900	NUT, HEX 7/8 NF
38	2	011608	SCREW, HEX HD. 1/2 NC X 2" GR.5
39	4	021500	WASHER, SP. LK. 1/2
40	4	012197	SCREW, SOC. HD. 1/2 NC X 1 1/2 GR.5
41	6	002608	SCREW, 1/4-20 X 3/4 S.T. TYPE F
42	1	480403	COVER, VALVE (w/ NOTCH)
43	4	008701	SCREW, HEX HD. 3/8 NC X 1"LG
44	4	017100	NUT, HEX 3/8 NC
45	10	021100	WASHER, SP. LK. 3/8
46	5	330370	SCREW, HEX HD. 3/8 NC X 7/8 GR.8
47	1	366180	DRUM, HOIST
48	1	366158	SCREW, HEX HD. 3/8 NC X 3/4 GR.8

AW-360731
5005H PEDESTAL ASSEMBLY

ITEM	QTY.	PART NO.	DESCRIPTION
49	2	009118	SCREW, SOC. HD. 1/2 NC X 2" GR.5
50	1	360805	CYLINDER, BOOM UP (COMPLETE)
	1	360805-001	CASE ASSEMBLY
	1	360805-002	SHAFT ASSEMBLY
	1	360805-003	HEAD GLAND
	1	360805-004	PISTON
51	1	360806	SEAL KIT
52	1	480597	RECEPTACLE ASSEMBLY
53	2	000404	SCREW, #6-32 X 5/8
54	2	019600	WASHER, SP. LK. #6
55	2	015400	NUT, HEX #6-32
56	1	480547	CAP, RECEPTACLE
57	1	480410	BRACKET
58	1	370433	CABLE, CONNECTOR
59	1	360155	CABLE, HOIST 5/16
60	2	021502	WASHER, SP. LK. 1/2 (HI-COLLAR)
61	2	021601	WASHER, FLAT 1/2 SAE (SPECIAL)
62	1	366987	RETAINING CLIP, RELAY BOX ASSEMBLY

NOTES

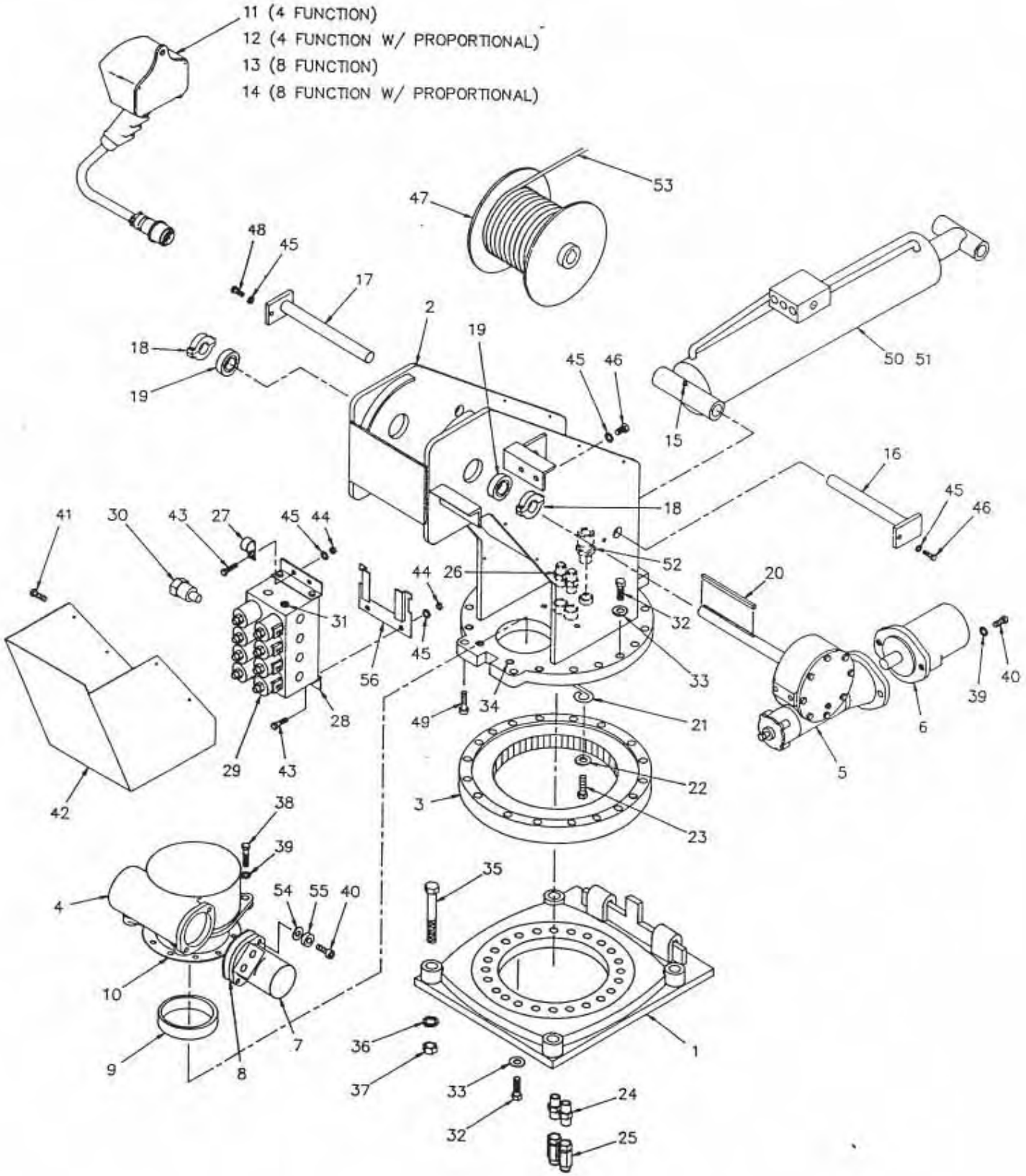

AW–360738
5005H PEDESTAL ASSEMBLY
IN COMPARTMENT (IC) PENDANT

AW-360738
5005H PEDESTAL ASSEMBLY (IC)

ITEM	QTY.	PART NO.	DESCRIPTION
1	1	360536	BASE PLATE ASSEMBLY
2	1	360615	PEDESTAL WELDMENT
3	1	480023-002	ROTATION BEARING
4	1	480028	GEAR BOX, ROTATION
5	1	480075	ACTUATOR, HOIST
6	1	360199	HYD. MOTOR (HOIST)
7	1	480027	HYD. MOTOR (ROTATION)
8	1	480019	GASKET, MOTOR
9	1	360162	ECCENTRIC RING
10	1	480011	SEAL, ROTATION BOX
11	1	480590	PENDANT, 4 FUNCTION
12	1	480591	PENDANT, 4 FUNCTION (WITH PROPORTIONAL)
13	1	480952	PENDANT, 8 FUNCTION
14	1	480593	PENDANT, 8 FUNCTION (WITH PROPORTIONAL)
15	2	239000	GREASE ZERK
16	1	360624	PIN, PEDESTAL/CYLINDER
17	1	360625	PIN, LOWER BOOM PIVOT
18	2	330468	COLLAR, SPLIT LOCK
19	2	400500	BEARING
20	1	480094	KEY, 3/8 SQ.
21	1	360207	RETAINER, ECCENTRIC RING
22	1	020600	WASHER, SP. LK. 5/16
23	1	007807	SCREW, HEX HD. 5/16 NC X 3/4 GR.5
24	2	750413	REDUCER, -8 NPT/-6 NPTF
25	2	750412	SWIVEL JOINT, -8
26	2	360054	ADAPTER, -8 NPT/-8 JIC
27	1	480024	MOUNT, PENDANT RETAINER
28	1	480182	MANIFOLD, CARTRIDGE
29	8	480184	VALVE, CARTRIDGE
30	1	480183	CARTRIDGE, FLOW REGULATOR
31	1	000109	PLUG, PIPE 3/8
32	38	012198	SCREW, HEX HD. 5/8 NC X 1 3/4 GR.8
33	38	023902	WASHER, FLAT 5/8 (HARDENED)
34	4	006205	SCREW, SOC. HD. 5/8 NC X 1 1/4 GR.8
35	4	015104	SCREW, HEX HD. 7/8 NF X 5" GR.8
36	4	022200	LOCKWASHER, 7/8
37	4	018900	NUT, HEX 7/8 NF
38	2	011608	SCREW, HEX HD. 1/2 NC X 2" GR.5
39	4	021500	WASHER, SP. LK. 1/2
40	4	012197	SCREW, SOC. HD. 1/2 NC X 1 1/2 GR.5
41	6	002608	SCREW, 1/4-20 X 3/4 S.T. TYPE F
42	1	360544	COVER, VALVE
43	4	008701	SCREW, HEX HD. 3/8 NC X 1"LG
44	4	017100	NUT, HEX 3/8 NC
45	10	021100	WASHER, SP. LK. 3/8
46	5	330370	SCREW, HEX HD. 3/8 NC X 7/8 GR.8
47	1	366180	DRUM, HOIST
48	1	366158	SCREW, HEX HD. 3/8 NC X 3/4 GR.8

AW-360738
5005H PEDESTAL ASSEMBLY (IC)

ITEM	QTY.	PART NO.	DESCRIPTION
49	2	009118	SCREW, SOC. HD. 1/2 NC X 2" GR.5
50	1	360805	CYLINDER, BOOM UP (COMPLETE)
	1	360805-001	CASE ASSEMBLY
	1	360805-002	SHAFT ASSEMBLY
	1	360805-003	HEAD GLAND
	1	360805-004	PISTON
51	1	360806	SEAL KIT
52	1	370433	CABLE, CONNECTOR
53	1	360155	CABLE, HOIST 5/16
54	2	021502	WASHER, SP. LK. 1/2 (HI-COLLAR)
55	2	021601	WASHER, FLAT 1/2 SAE (SPECIAL)
56	1	366987	RETAINING CLIP, RELAY BOX ASSEMBLY

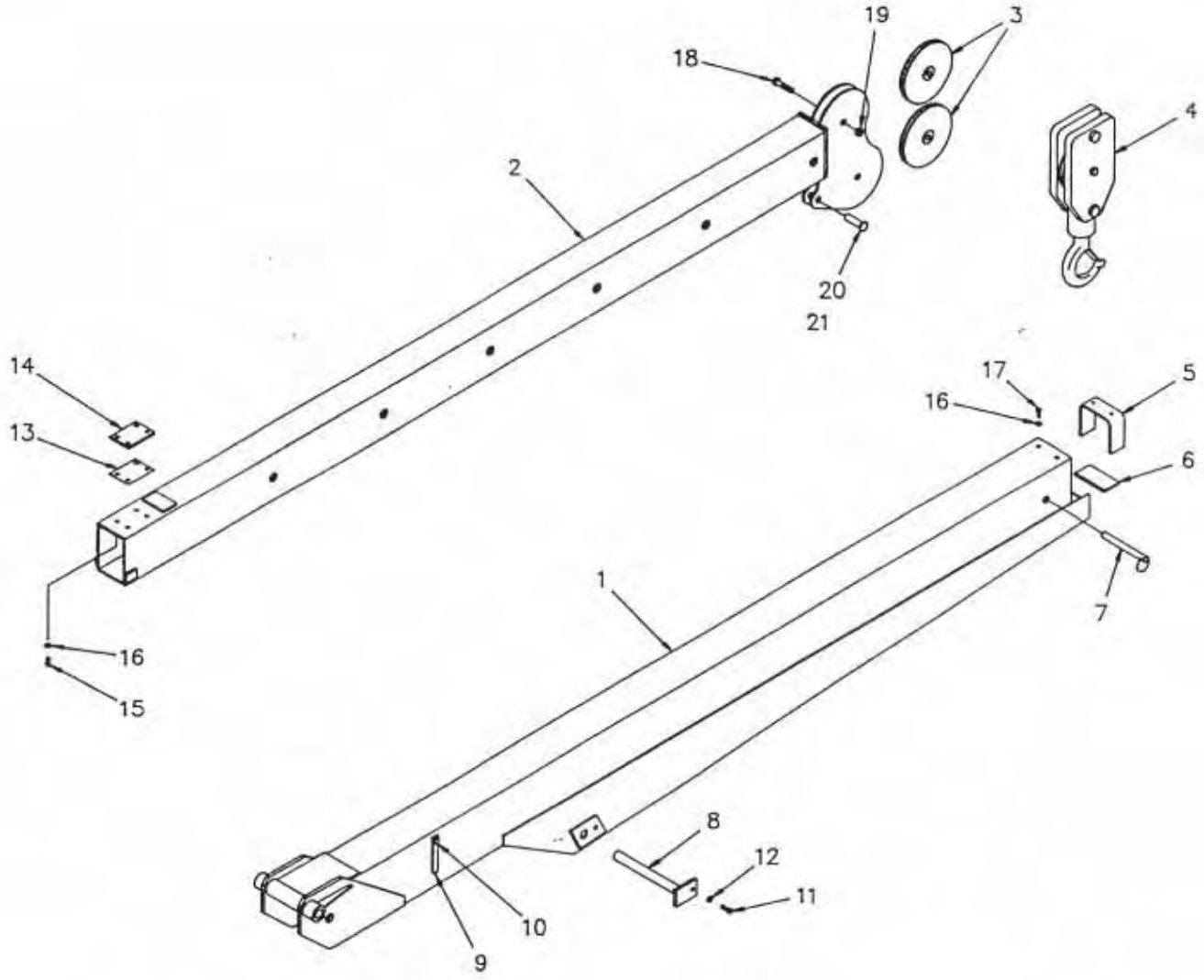

ITEM	QTY	P/N	DESCRIPTION
1	1	360515	LOWER BOOM
2	1	360525	BOOM, INNER
3	2	360205	SHEAVE ASSEMBLY
4	1	360602	TRAVELING BLOCK
5	1	360545	RETAINER, INNER BOOM
6	1	360167	PAD, LOWER
7	1	360112	PIN, MANUAL BOOM
8	1	360621	PIN, BOOM/CYLINDER
9	2	360038	ANGLE INDICATOR
10	2	016300	NUT, HX LK 1/4-NC
11	1	366158	SCREW, HX HD 3/8NC X 3/4
12	1	021100	WASHER, SP LK 3/8
13	2	480033	SHIM, LARGE (.032 THK)
14	1	480032	PAD, BOOM
15	4	005406	SCREW, HX HD 1/4-NF X 1/2
16	6	020200	WASHER, SP LK 1/4
17	2	005901	SCREW, HX HD 1/4-NC X 1/2
18	2	013506	SCREW, HX HD 5/8-NF CP
19	2	018300	NUT, HX LK 5/8-NF CP
20	1	360126	PIN, CROWN
21	1	360124	PIN, HITCH

AW-113
5005H BOOM ASSEMBLY
MANUAL EXTENSION

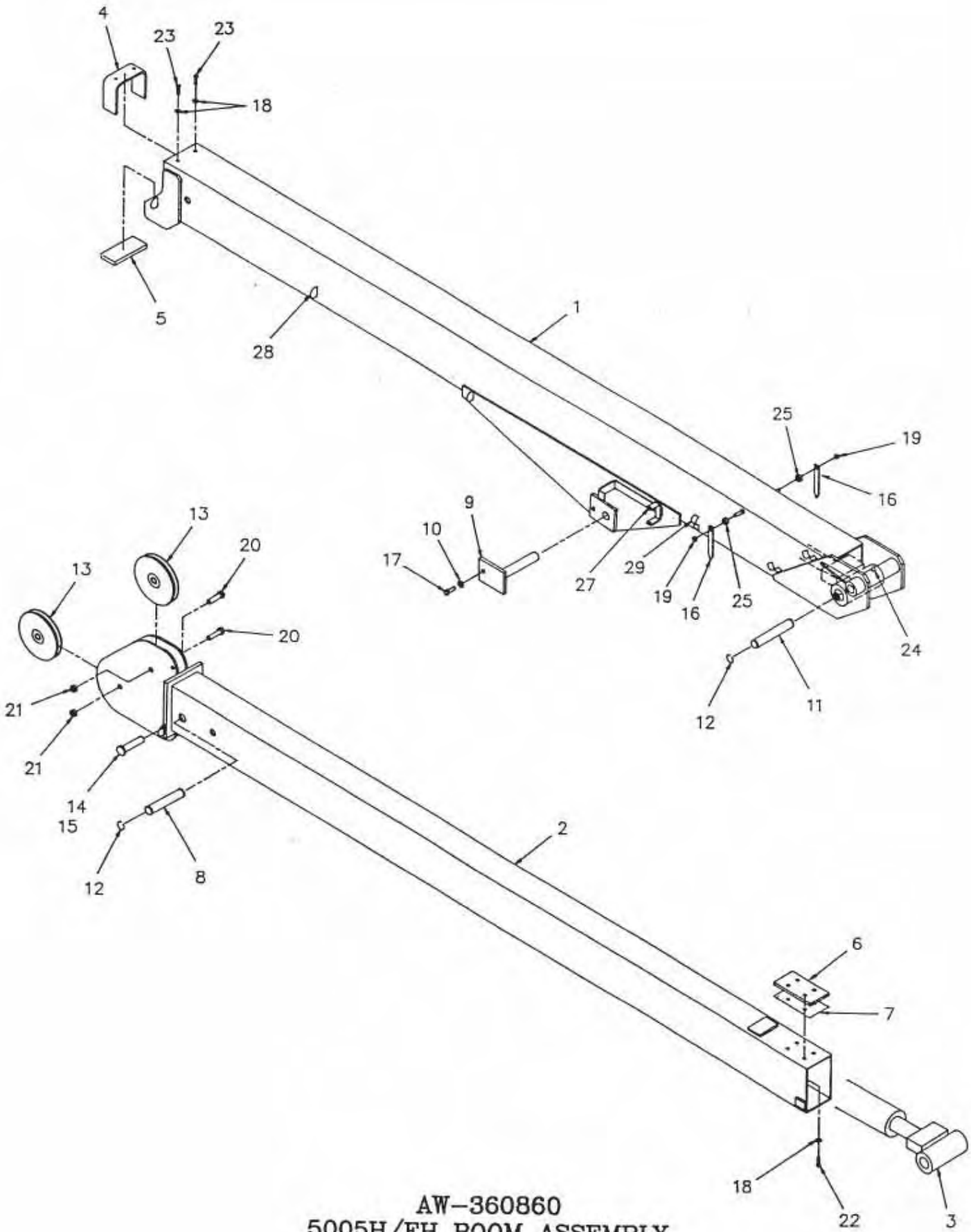

AW-360860
5005H/EH BOOM ASSEMBLY
10-16 BOOM

AW-360860
5005H/EH BOOM ASSEMBLY (10-16 BOOM)

ITEM	QTY.	PART NO.	DESCRIPTION
1	1	360861	BOOM, LOWER
2	1	366862	BOOM, UPPER
3	1	360152	CYLINDER, BOOM EXTENSION
4	1	360545	RETAINER, INNER BOOM
5	1	360167	PAD, RETAINER LOWER (SLIDE)
6	1	480032	PAD, BOOM
7	2	480033	SHIM, LARGE (.032 THK)
8	1	360121	PIN, EXTENSION CYLINDER-UPPER BOOM
9	1	360621	PIN, BOOM / CYCLINDER
10	1	021100	WASHER, SP. LK. 3/8
11	1	360120	PIN, EXTENSION CYLINDER-LOWER BOOM
12	4	360122	RING, RETAINING
13	2	240236	SHEAVE, ASSEMBLY
14	1	360814	PIN, CROWN
15	1	360124	PIN, HITCH
16	2	360038	INDICATOR, ANGLE
17	1	366158	SCREW, HX. HD. 3/8 NC X 3/4 LG. GR.8
18	6	020200	WASHER, SP. LK. 1/4
19	2	016300	NUT, LK. 1/4 NC
20	2	011511	SCREW, HX. HD. 5/8 NF X 2 1/4 GR.5
21	2	017700	NUT, LK. 5/8 NFCP
22	4	005406	SCREW, HX. HD. 1/4 NF X 1/2 LG.
23	2	005901	SCREW, HX. HD. 1/4 NC X 1/2 LG.
24	1	239000	GREASE ZERK
25	2	360849	SPACER, PLASTIC
26	1	330603	SEAL KIT
27	1	REF	CORD REEL BRACKET (320551)
28	4	REF	D-RING (366108)
29	3	REF	CLIP (000115)

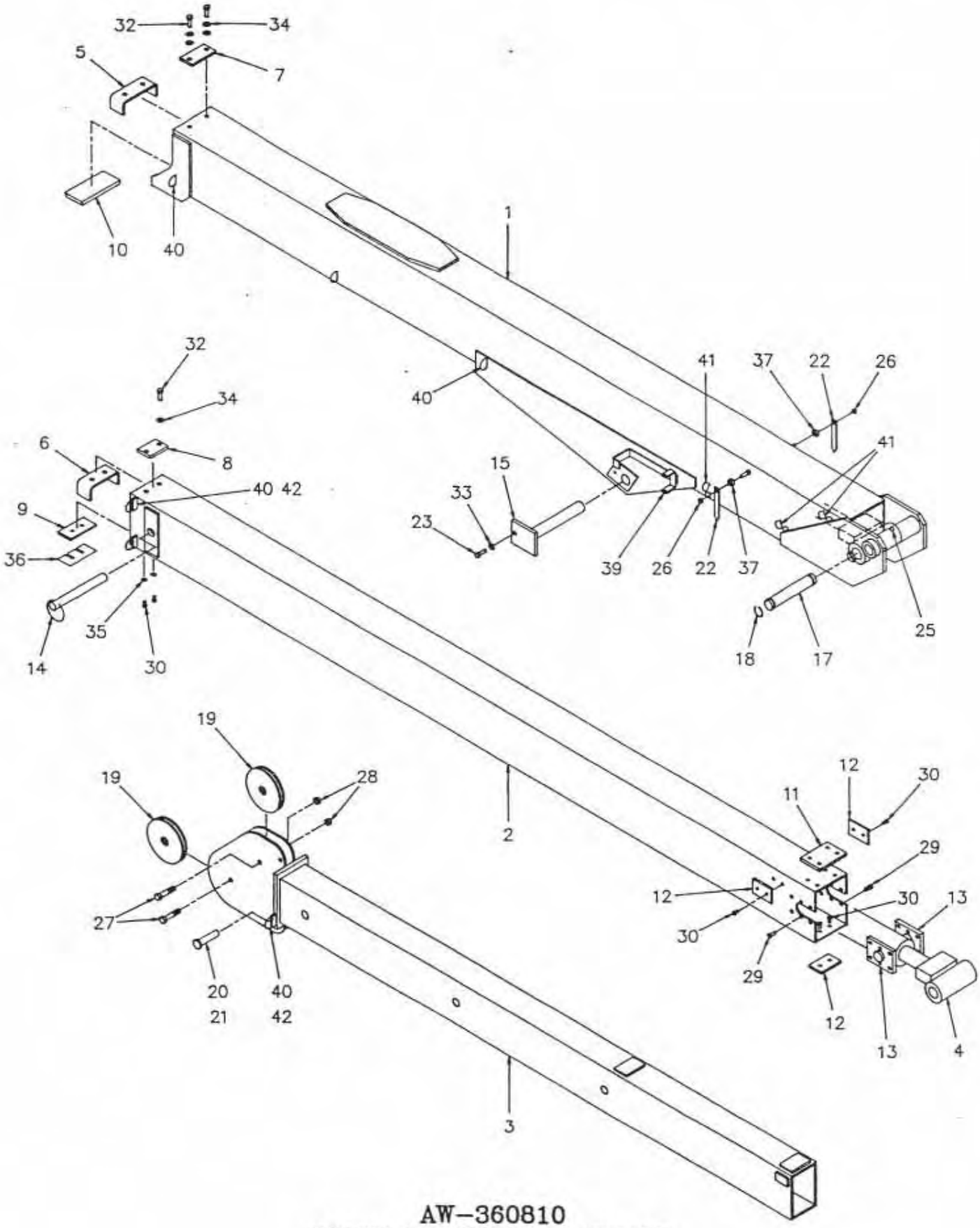

AW–360810
5005H/EH BOOM ASSEMBLY
10–16–20

AW-360810
5005H/EH BOOM ASSEMBLY (10-16-20 BOOM)

ITEM	QTY.	PART NO.	DESCRIPTION
1	1	360815	BOOM, LOWER
2	1	366080	BOOM, CENTER
3	1	360820	BOOM, MANUAL
4	1	366162	CYLINDER, BOOM EXTENSION
5	1	366183	STOP, CENTER BOOM
6	1	366112	STOP, UPPER BOOM
7	1	366201	PAD, BOTTOM TOP
8	1	366202	PAD, BOOM TOP
9	1	366199	PAD, BOOM
10	1	366187	PAD, RETAINER LOWER
11	1	366185	PAD, BOOM TOP (CENTER BOOM)
12	3	366186	PAD, BOOM (CENTER BOOM)
13	2	366184	RETAINER, EXTENSION CYLINDER
14	1	366190	PIN, ASSEMBLY WITH LANYARD
15	1	360819	PIN, BOOM CYLINDER
16	–	–	–
17	1	366193	PIN, EXTENSION CYLINDER
18	2	480029	RING, RETAINING
19	2	240236	SHEAVE ASSEMBLY
20	1	360814	PIN, CROWN
21	1	360124	PIN, HITCH
22	2	360038	ANGLE INDICATOR
23	1	366158	SCREW, HEX HD 3/8NC X 3/4 GR.8
24	–	–	–
25	1	239000	GREASE ZERK
26	2	016300	NUT, HEX LK 1/4NC
27	2	011511	SCREW, HEX HD 1/2NF X 2 1/4 GR.5
28	2	017700	NUT, HEX LK 1/2NF
29	12	008400	SCREW, HEX HD 3/8NC X 3/4
30	8	007808	SCREW, HEX HD 5/16NC 1/2
31	4	005406	SCREW, HEX HD 1/4NF X 1/2
32	4	008800	SCREW, HEX HD 3/8NF X 1
33	5	021100	WASHER, SP LK 3/8 SAE
34	6	021200	WASHER, FLAT 3/8
35	2	020600	WASHER, SP LK 5/16
36	A/R	480037	SHIM
37	2	360849	SPACER, PLASTIC 1/4"ø
38	1	366166	SEAL KIT
39	1	REF	CORD REEL BRACKET (320551)
40	6	REF	D-RING (366108)
41	3	REF	CLIP (000115)
42	3	REF	SPACER (800246-025)

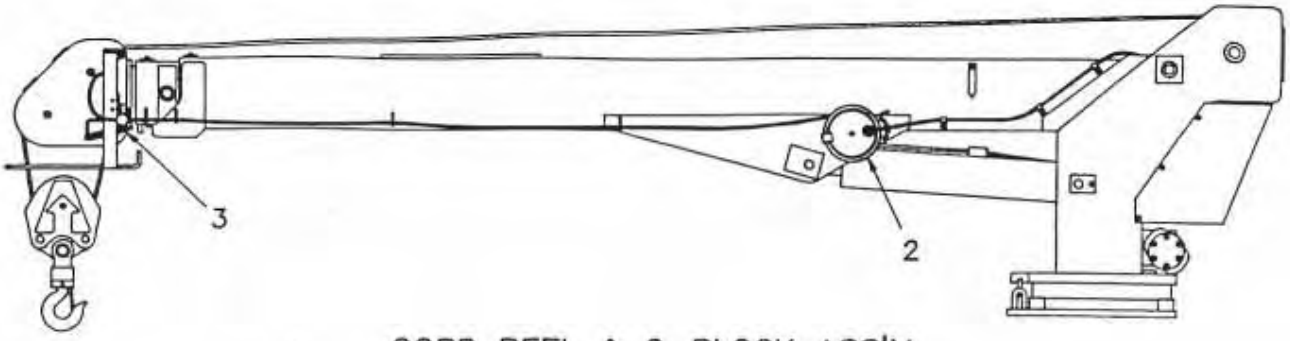

CORD REEL & 2-BLOCK ASS'Y

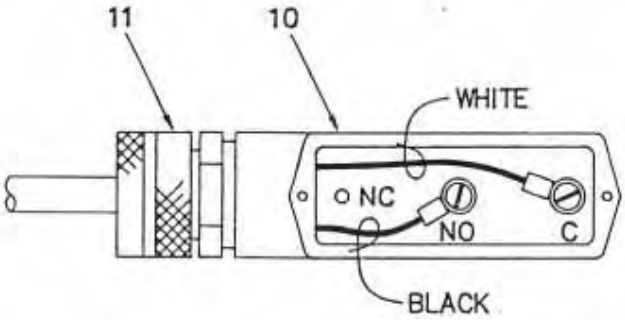

REFERENCE-SWITCH WIRING

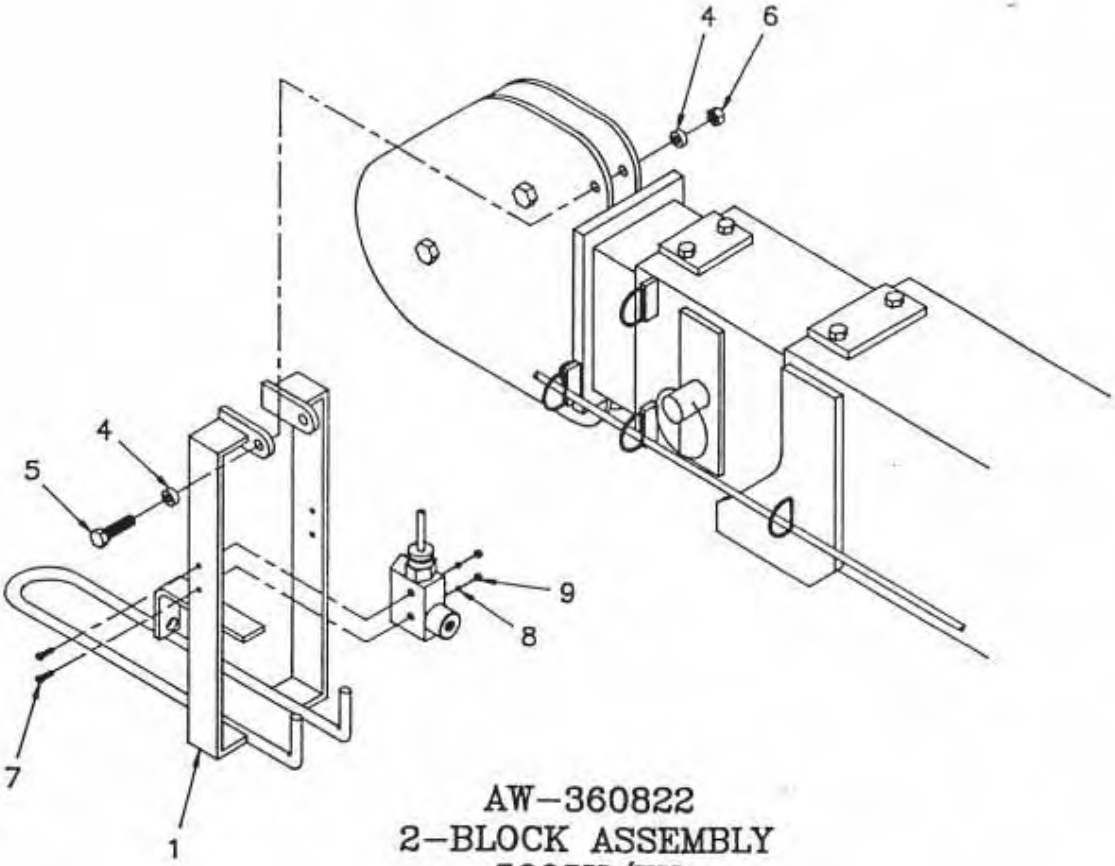

AW-360822
2-BLOCK ASSEMBLY
5005H/EH

AW-360822
2-BLOCK ASSEMBLY, 5005H/EH

ITEM	QTY.	PART NO.	DESCRIPTION
1	1	360823	2-BLOCK WELDMENT
2	1	366973-001	CORD REEL ASSY w/WEATHER PACK CONNECTORS
3	1	360824	SPRING, 2-BLOCK
4	2	360852	SPACER, PLASTIC ø3/8"
5	1	009800	SCREW, HX. HD. 3/8-24 NF X 3 1/2 LG.
6	1	017400	NUT, LOCK 3/8=24 NF
7	2	000610	SCREW, ROUND HD. #6-32 NC X 1 1/2 LG.
8	2	019600	WASHER, SP. LK. #6
9	2	015400	NUT, #6-32 NC
10	1	646900	SWITCH
11	1	642908	CORD CONNECTOR

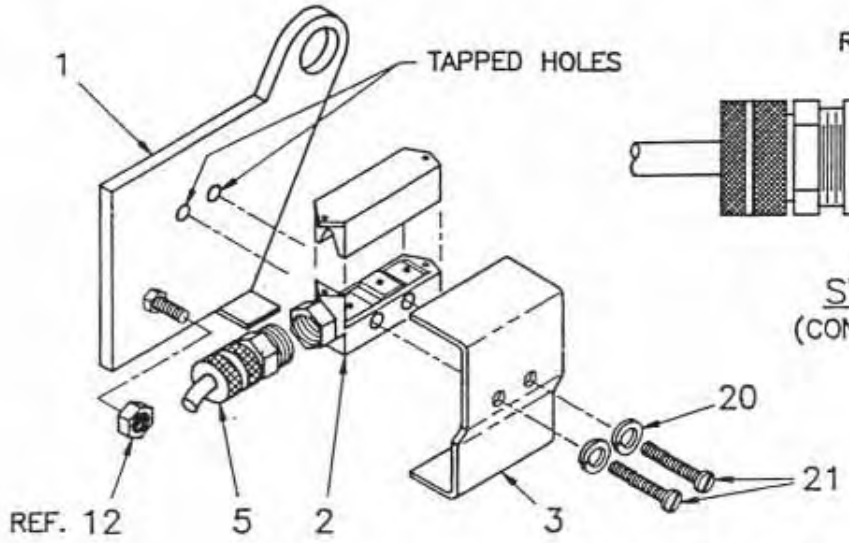

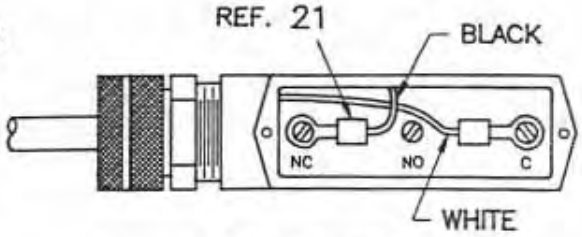

SWITCH ASSEMBLY
(CONN. INSIDE LIMIT SWITCH)

SWITCH ASS'Y/MOUNTING

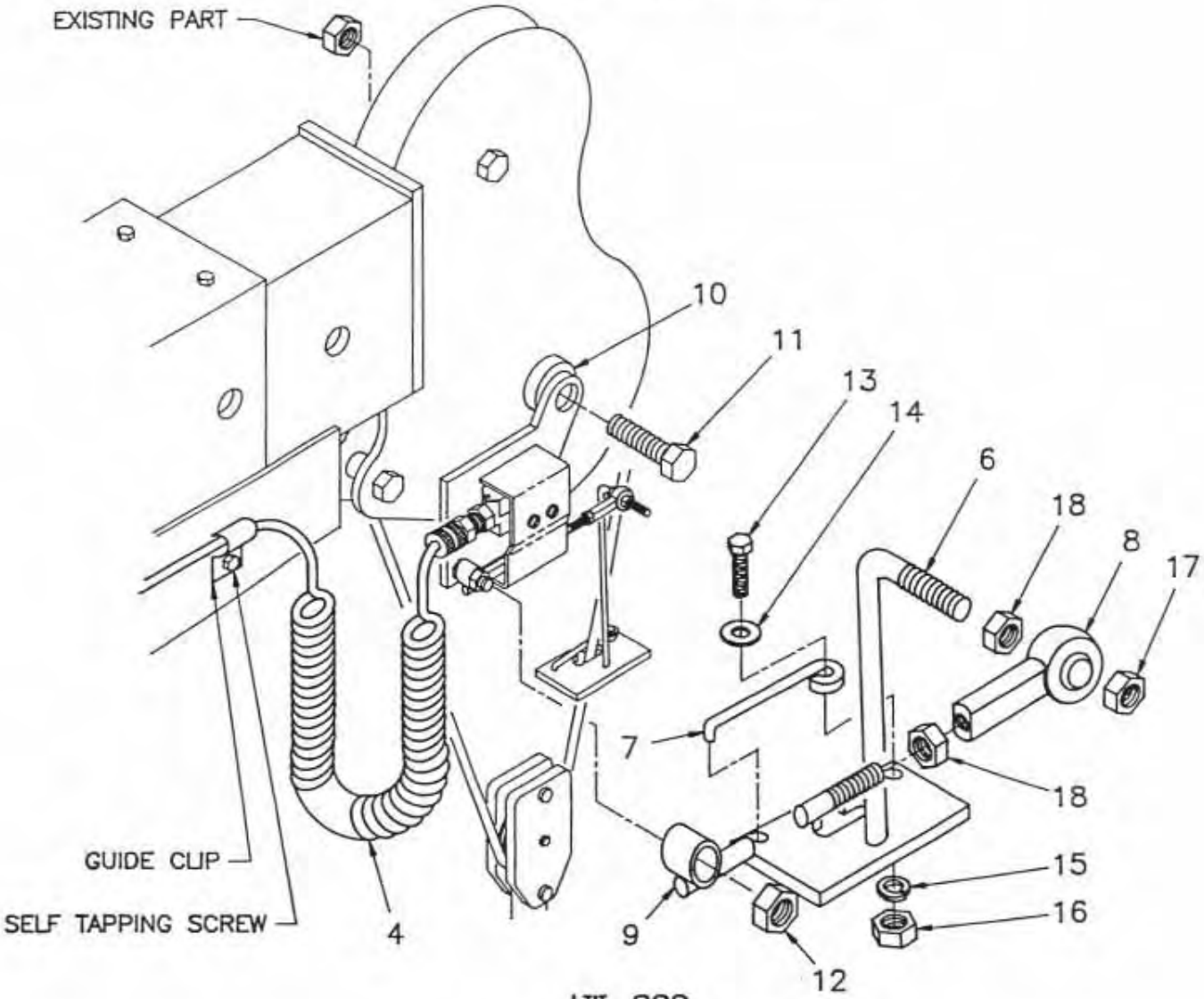

AW–222
2–BLOCK ASSEMBLY
5005H MANUAL EXTENSION

AW-222
2-BLOCK ASSEMBLY, 5005H MANUAL EXTENSION

ITEM	QTY.	PART NO.	DESCRIPTION
1	1	363003	MOUNTING PLATE ASSEMBLY, SWITCH
2	1	646900	SWITCH, LOAD SENSOR
3	1	363004	COVER, SWITCH
4	1	363018	CORD ASSEMBLY
5	1	642908	CONNECTOR, CORD (STRAIGHT)
6	1	363007	RETAINER CABLE ASSEMBLY
7	1	360207	RETAINER
8	1	363006	BEARING, ROD END
9	1	363005	LINKAGE WELDMENT, ROD
10	1	800166-001	SPACER, TUBE 1 5/16 OD x 3/8 WALL x 1/2 LG.
11	1	012701	SCREW, HEX HD 5/8-NF x 3" LG. GR.5
12	1	017301	NUT, HEX-LOCK 3/8-NC
13	1	005604	SCREW, HEX HD 1/4-NC x 1" LG.
14	1	020901	WASHER, FLAT 5/16
15	1	020200	WASHER, SP LK 1/4
16	1	015900	NUT, HEX HD 1/4-NC
17	1	016200	NUT, HEX LOCK 1/4-NF
18	2	016100	NUT, HEX HD 1/4-NF
19	2	002602	SCREW, RD HD #6-NC x 1 1/4 LG.
20	2	019600	WASHER, SP LK #6
* 21	–	000101	TERMINAL, WR-14-16 (REF.)

* ITEM 21 TERMINAL, SUPPLIED WITH CORD ASSEMBLY 363018

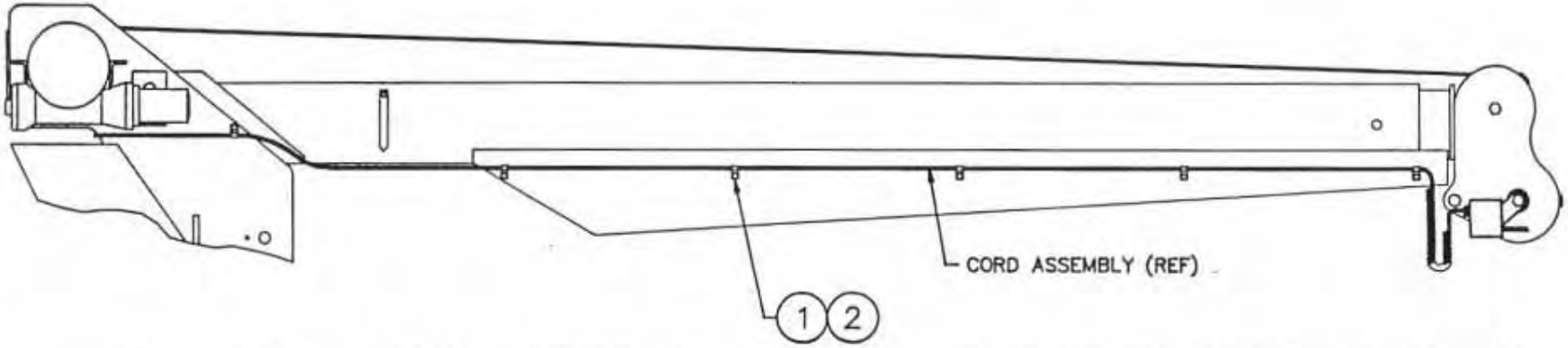

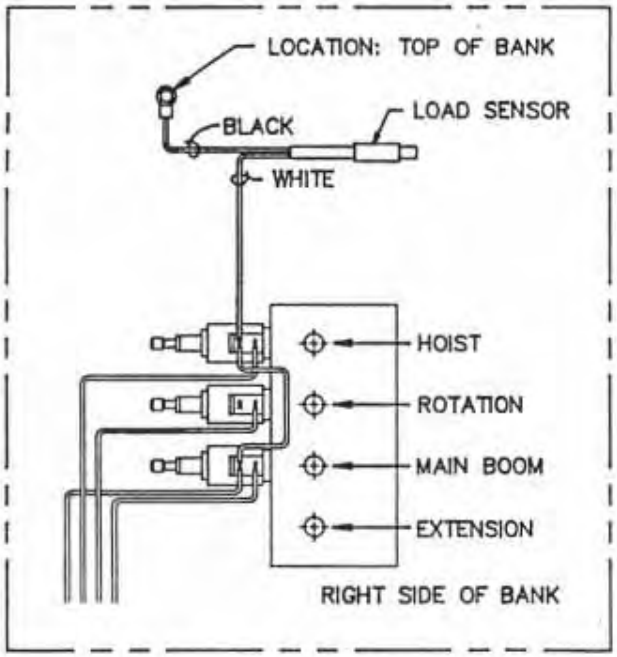

ELECTRICAL – FROM

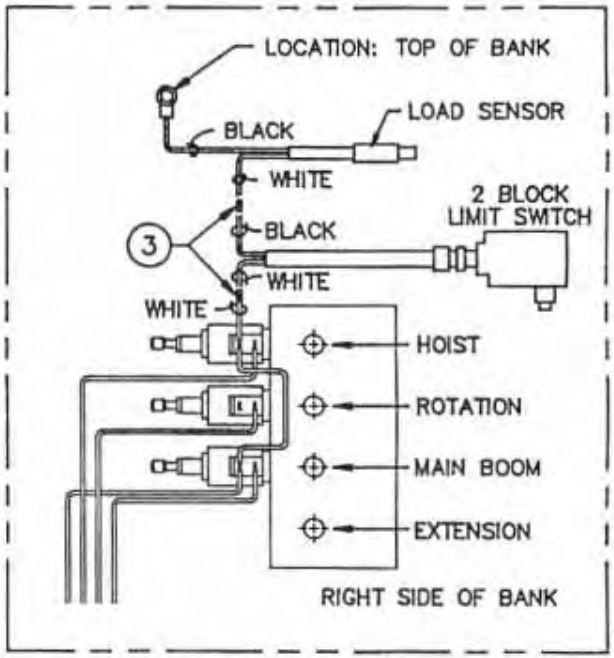

ELECTRICAL – TO

ITEM	QTY	P/N	DESCRIPTION
1	6	000115	CLIP, #115
2	6	002615	SCW, HX HD 1/4 x 3/8 (SELF TAPPING)
*3	2	000302	TERMINAL, WIRE (BUTT SPLICE)

* ITEM 3 WIRE TERMINAL, SUPPLIED WITH CORD ASSY 363018

AW-223
2-BLOCK ELECTRICAL
5005H MANUAL EXTENSION

AUTOMATIC SAFETY BRAKE ASSEMBLY (OIL COOLED)
HOIST

1. Winch has right hand worm and gear and spools over drum; use number one slots for brake balls
2. Install brake hub on winch worm with key.
3. Assemble balls in cam using hard grease to hold balls in place.
4. Install cam and balls, fitting balls in slots on hub.
5. Install brake disc.
6. Install retainer.
7. Install flat spring in brake housing cover (arch down).
8. Install brake housing cover, fitting pins in slots on spring and holes in retainer.
9. Test brake by shifting winch to UP then DOWN to see if brake is working in proper rotation. If not remove brake and locate brake balls in opposite set of slots.
10. Adjust to suit by tightening or loosening screw on outside of cover. When proper adjustment is obtained, secure screw with jam nut.

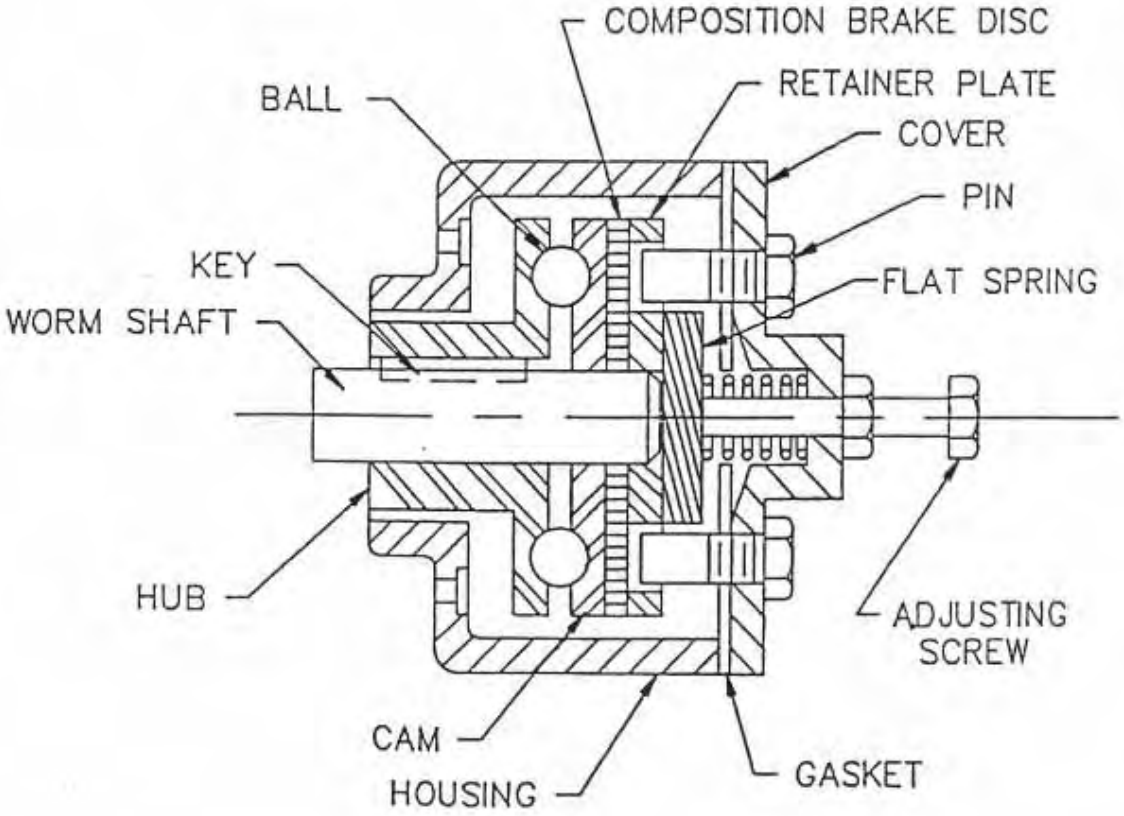

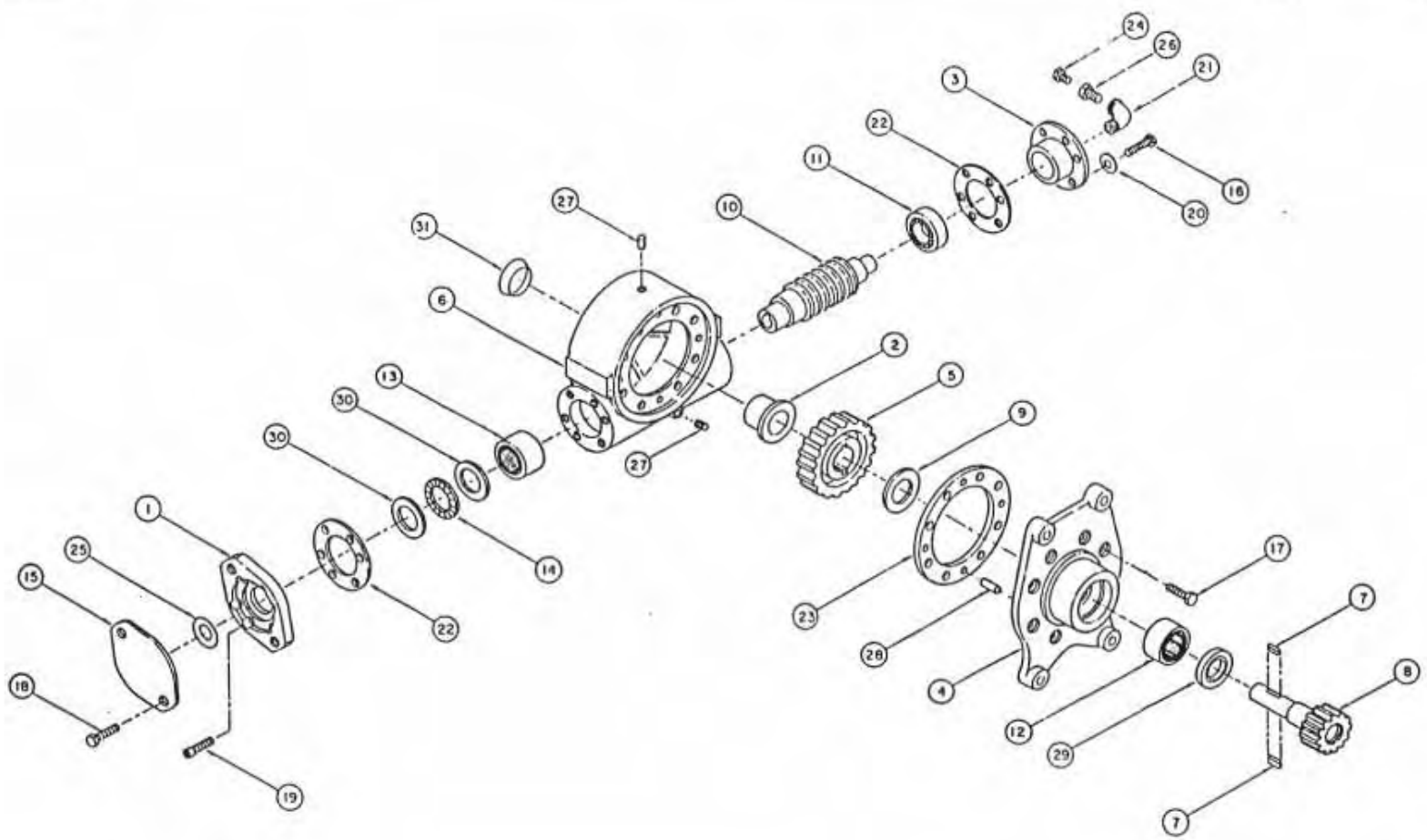

ITEM	QTY	DWG	PART NO	DESCRIPTION

LIST OF MATERIAL

AUTO CRANE COMPANY

GEAR BOX, ROTATION

SIZE D

DRAWING NO AW-480028

SHEET ___ OF ___

NEXT ASSY

4-8.0.0

AW-480028
GEAR BOX, ROTATION

ITEM	QTY.	PART NO.	DESCRIPTION
1	1	480240	ADAPTER
2	1	480241	BUSHING
3	1	480242	CAP, BEARING
4	1	480243	COVER
5	1	480244	GEAR, R.H.
6	1	480237	HOUSING, GEAR
7	2	480246	KEY
8	1	480247	SHAFT, OUTPUT
9	1	480248	WASHER, THRUST
10	1	480249	WORM, R.H.
11	1	480251	BEARING, BALL
12	1	480252	BEARING, NEEDLE
13	1	480253	BEARING, NEEDLE
14	1	480254	BEARING, THRUST
15	1	480255	COVER
16	6	007400	CAPSCREW, 5/16-18 NC X 1"LG. HX. HD.
17	8	480238	CAPSCREW, 5/16-18 NC X 1 1/4 LG. HX. NYLOC HVY PATCH
18	2	011508	CAPSCREW, 1/2-13 NC X 3/4 LG. HX. HD.
19	6	480256	CAPSCREW, 5/16-18 NC X 1"LG. SOC. HD. LOC.-WEL
20	6	480258	LOCKWASHER, 5/16 MED. SECT. C.P.
21	1	480259	ELBOW, 90°
22	2	480260	GASKET
23	1	480250	GASKET
24	1	480262	FITTING, RELIEF
25	1	480239	O-RING
26	1	480263	REDUCER
27	2	480264	PLUG, PIPE
28	4	480265	PIN, DOWEL
29	1	480266	SEAL, OIL
30	2	480268	WASHER, THRUST
31	1	480269	PLUG, EXPANSION

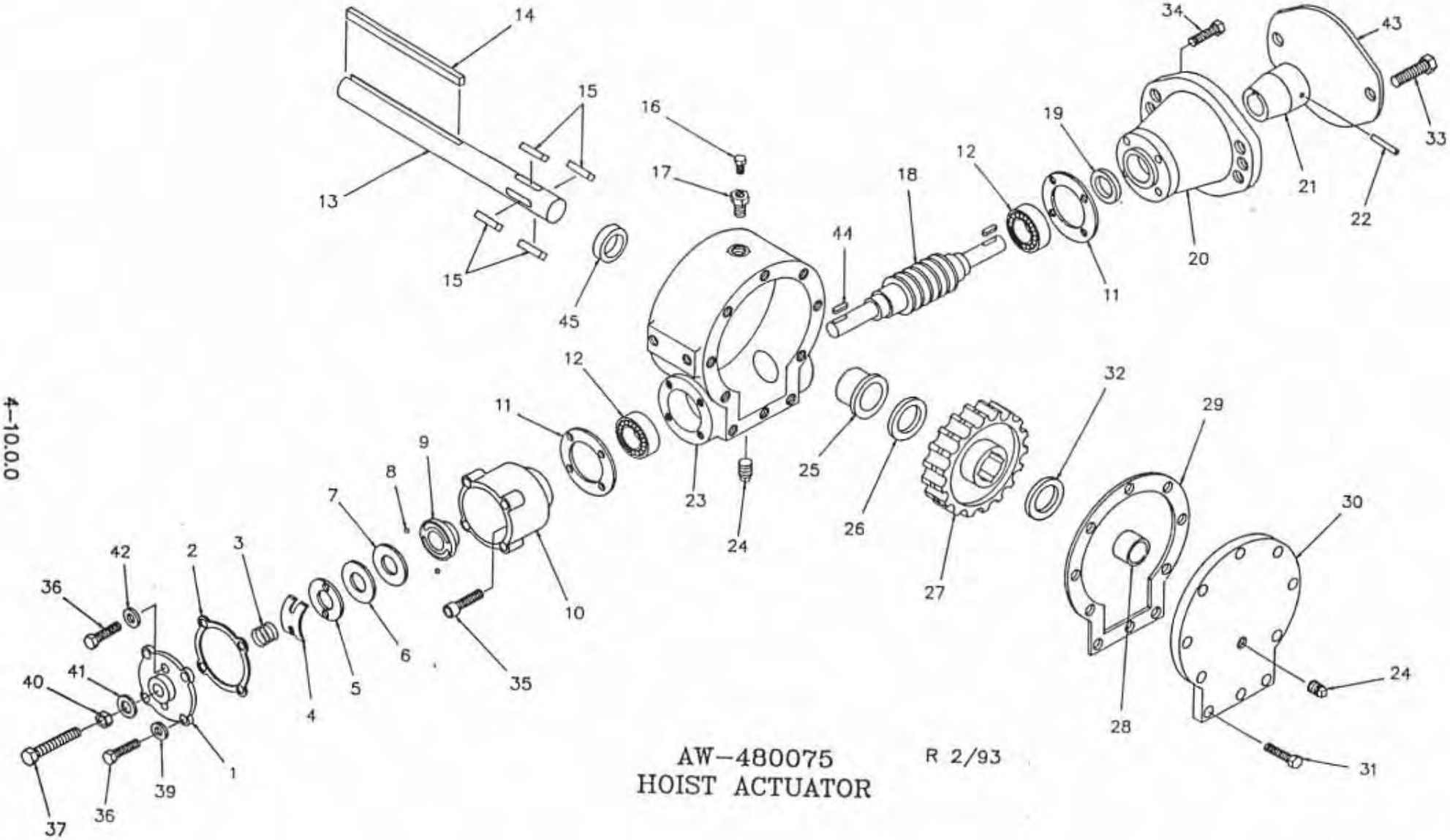

AW–480075 R 2/93
HOIST ACTUATOR

HOIST ACTUATOR AW-480075

ITEM	QTY.	PART NO.	DESCRIPTION
1	1	360450	COVER, WORM BRAKE
2	1	360359	GASKET
3	1	360368	SPRING
4	1	360367	SPRING, FLAT
5	1	360342	PLATE, RETAINER
6	1	360364	PLATE, THRUST
7	1	360331	CAM, PLATE
8	2	360345	BALL, BRAKE
9	1	360339	HUB-BRAKE
10	1	360336	HOUSING-BRAKE
11	2	360358	GASKET
12	2	360346	BEARING
13	1	480078	SHAFT-OUTPUT
14	1	480094	KEY, 3/8 SQ.
15	4	360464	KEY, BARTH
16	1	360360	FITTING-RELIEF
17	1	360361	REDUCER
18	1	360344	WORM-R.H.
19	1	360365	OIL SEAL
20	1	360330	ADAPTER
21	1	360332	COUPLING
22	1	360363	SPIROL PIN
23	1	360461	HOUSING-GEAR (EFFECTIVE ON SERIAL NO. 636238)
24	2	360362	PIPE PLUG
25	1	360348	BUSHING
26	1	360369	THRUST WASHER
27	1	360460	GEAR-R.H. (EFFECTIVE ON SERIAL NO. 601090)
28	1	360462	BUSHING
29	1	360459	GASKET
30	1	360458	COVER
31	10	360350	CAPSCREW, 1/4-20NC x 3/4 LG. HX HD GR5
32	1	360466	THRUST WASHER
33	2	010202	CAPSCREW, 1/2-13NC x 1" LG. HX HD
34	4	360352	CAPSCREW, 1/4-20NC x 1 3/4 LG. SOC HD LOC-WEL
35	4	360463	CAPSCREW, 1/4-20NC x 7/8 SOC HD
36	6	360453	CAPSCREW, 1/4-20NC x 1" HX HD ALL THRD GR5 NYLOC H.P.
37	1	360456	CAPSCREW, 3/8-16NC x 1 1/2 LG HX HD ALL THRD GR5
38	–	–	–
39	4	360465	THREAD SEAL
40	1	360353	NUT, 3/8-16NC HX JAM
41	1	360371	THREAD SEAL
42	2	360455	WASHER, FLAT 1/4 ALUM.
43	1	360349	COVER-HYD. ADAPTER
44	2	360341	KEY
45	1	360366	OIL SEAL
46	1	480306	SEAL AND GASKET KIT

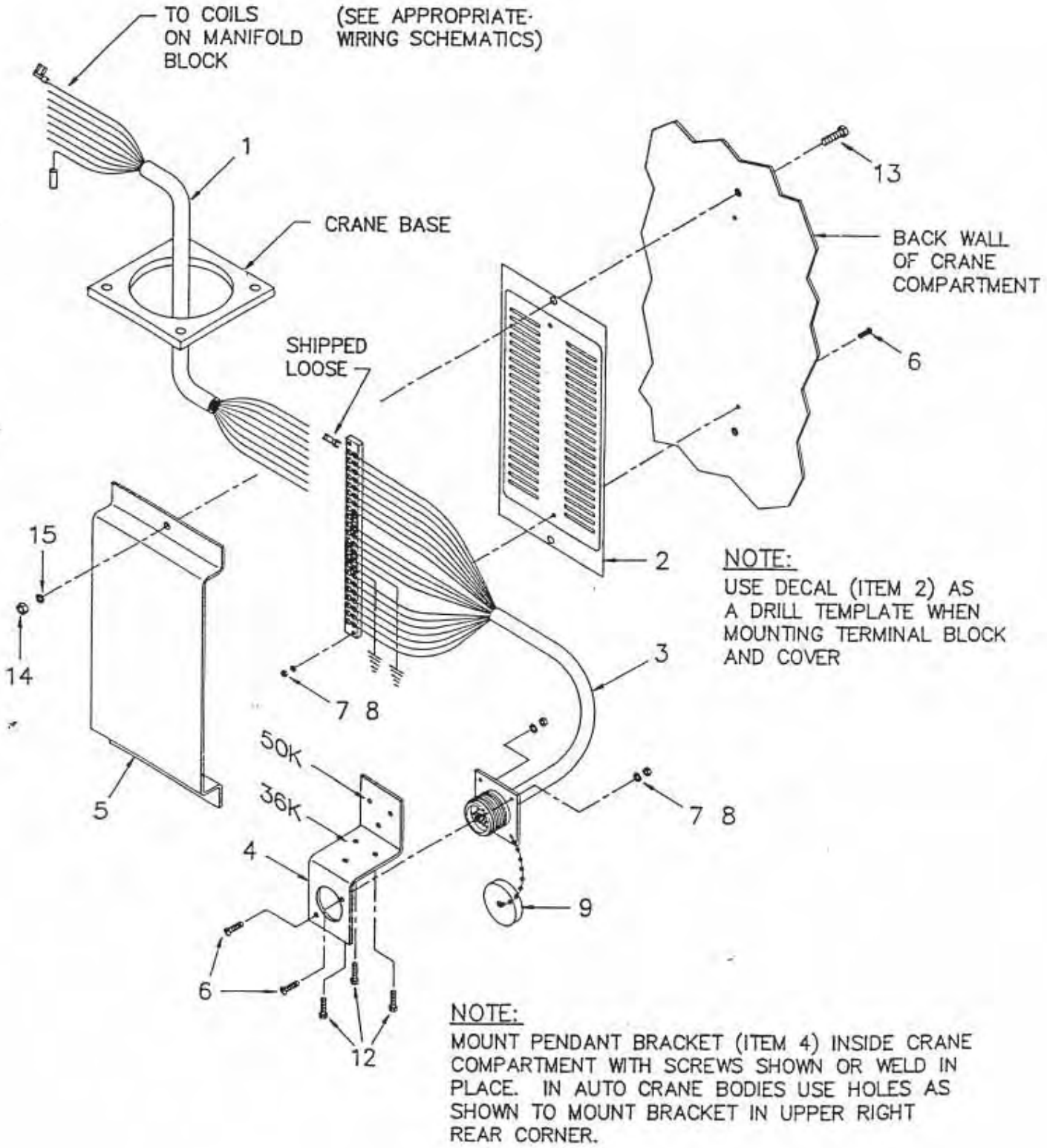

AW–178
INSTALLATION DRAWING
IN–COMPARTMENT (IC) PENDANT

IN-COMPARTMENT PENDANT INSTALLATION AW-178

ITEM	QTY.	PART NO.	DESCRIPTION
1	1	480492	HARNESS, CRANE PIGTAIL
2	1	480490	DECAL, 22 STATION TERMINAL BLOCK
3	1	480491	HARNESS, 22 STATION/19 PIN SOCKET
4	1	480626	BRACKET, PENDANT
5	1	480493	COVER, 22 STATION TERMINAL BLOCK
6	4	000404	SCREW, ROUND HD. #6-32NC x 5/8 LG.
7	4	015400	NUT, HEX #6-32NC
8	4	019600	WASHER, SP. LK. #6
9	1	480547	CAP, RECEPTACLE (19 PIN)
10	6	750738	WIRE TIE STICK ON RETAINER
11	6	634401	WIRE TIE (7" LG.)
12	3	330038	SCREW, HEX HD. #10-24NC x 3/4 LG. SELF TAPPING
13	2	005500	SCREW, HEX HD. 1/4-20NC x 3/4 LG. G5
14	2	015900	NUT, HEX 1/4-20NC
15	2	020200	WASHER, SP. LK. 1/4

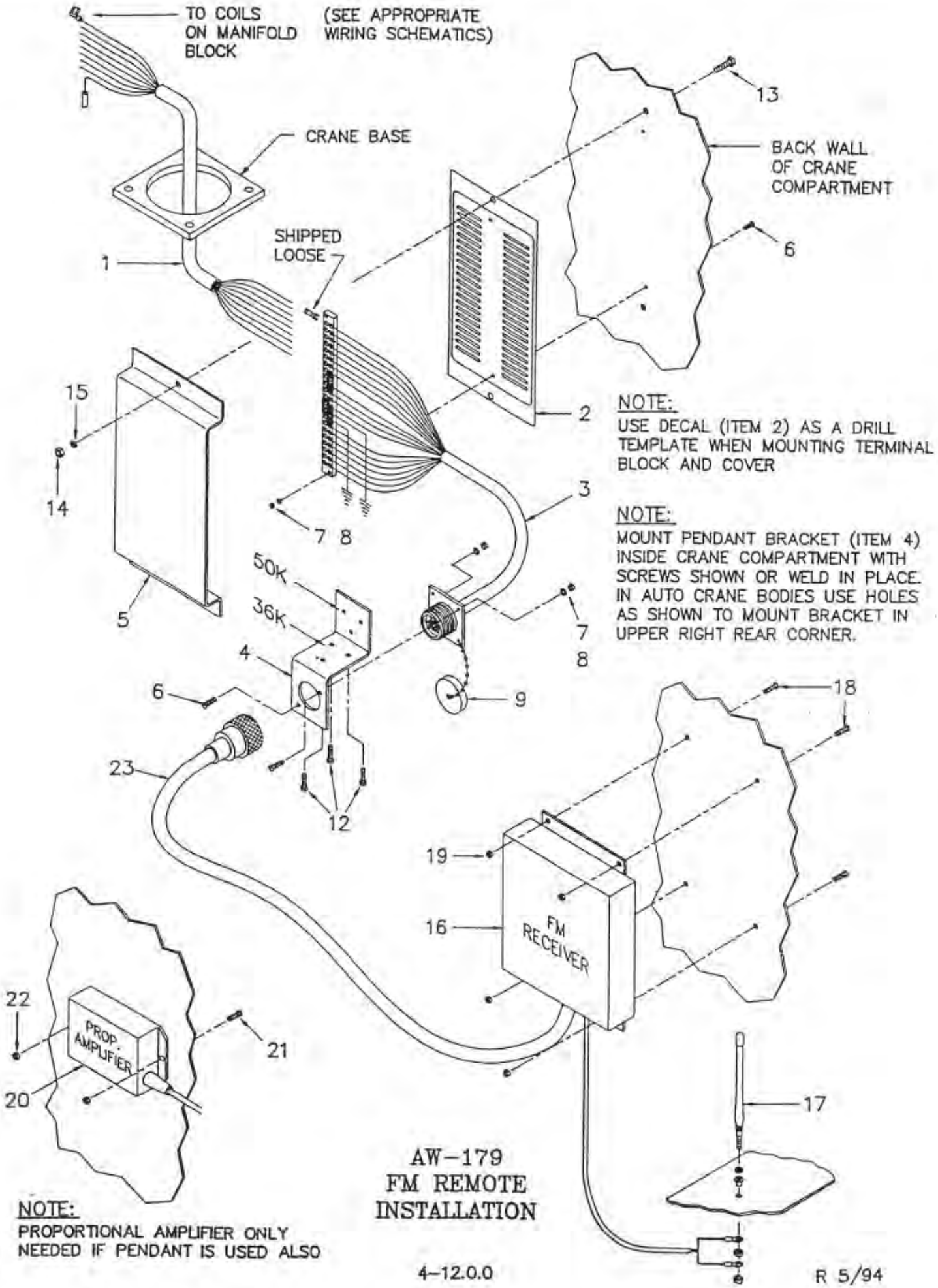

AW-179
FM REMOTE
INSTALLATION

FM REMOTE INSTALLATION AW-179

ITEM	QTY.	PART NO.	DESCRIPTION
1	1	480492	HARNESS, CRANE PIGTAIL
2	1	480490	DECAL, 22 STATION TERMINAL BLOCK
3	1	480491	HARNESS, 22 STATION/19 PIN SOCKET
4	1	480626	BRACKET, PENDANT
5	1	480493	COVER, 22 STATION TERMINAL BLOCK
6	4	000404	SCREW, ROUND HD. #6-32NC x 5/8 LG.
7	4	015400	NUT, HEX #6-32NC
8	4	019600	WASHER, SP. LK. #6
9	1	480547	CAP, RECEPTACLE (19 PIN)
10	6	750738	WIRE TIE STICK ON RETAINER
11	6	634401	WIRE TIE (7" LG.)
12	3	330038	SCREW, HEX HD. #10-24NC x 3/4 LG. SELF TAPPING
13	2	005500	SCREW, HEX HD. 1/4-20NC x 3/4 LG. G5
14	2	015900	NUT, HEX 1/4-20NC
15	2	020200	WASHER, SP. LK. 1/4
16	1	480629	FM REMOTE TRANSMITTER/RECEIVER ASSEMBLY
17	1	(SEE NOTE)	ANTENNA (STD.)
18	4	002607	SCREW, ROUND HD. #10-24NC x 3/4 LG.
19	4	015801	NUT, HEX LOCK #10-24NC
20	1	480537	AMPLIFIER, PROPORTIONAL
21	2	002200	SCREW, ROUND HD. #10-32NF x 3/4 LG.
22	2	015800	NUT, HEX LOCK #10-32NF
23	1	480625	CONTROL CABLE

NOTE:

STANDARD ANTENNA COMES WITH TRANSMITTER/RECEIVER ASSEMBLY;
- ANTENNA w/ MAGNETIC BASE (P/N 480608) CAN BE ORDERED AS AN EXTRA COST OPTION

NOTES

FIXTURE NO.	FINISH NO.

CHG LTR	REVISIONS DESCRIPTION	DATE	APP'D

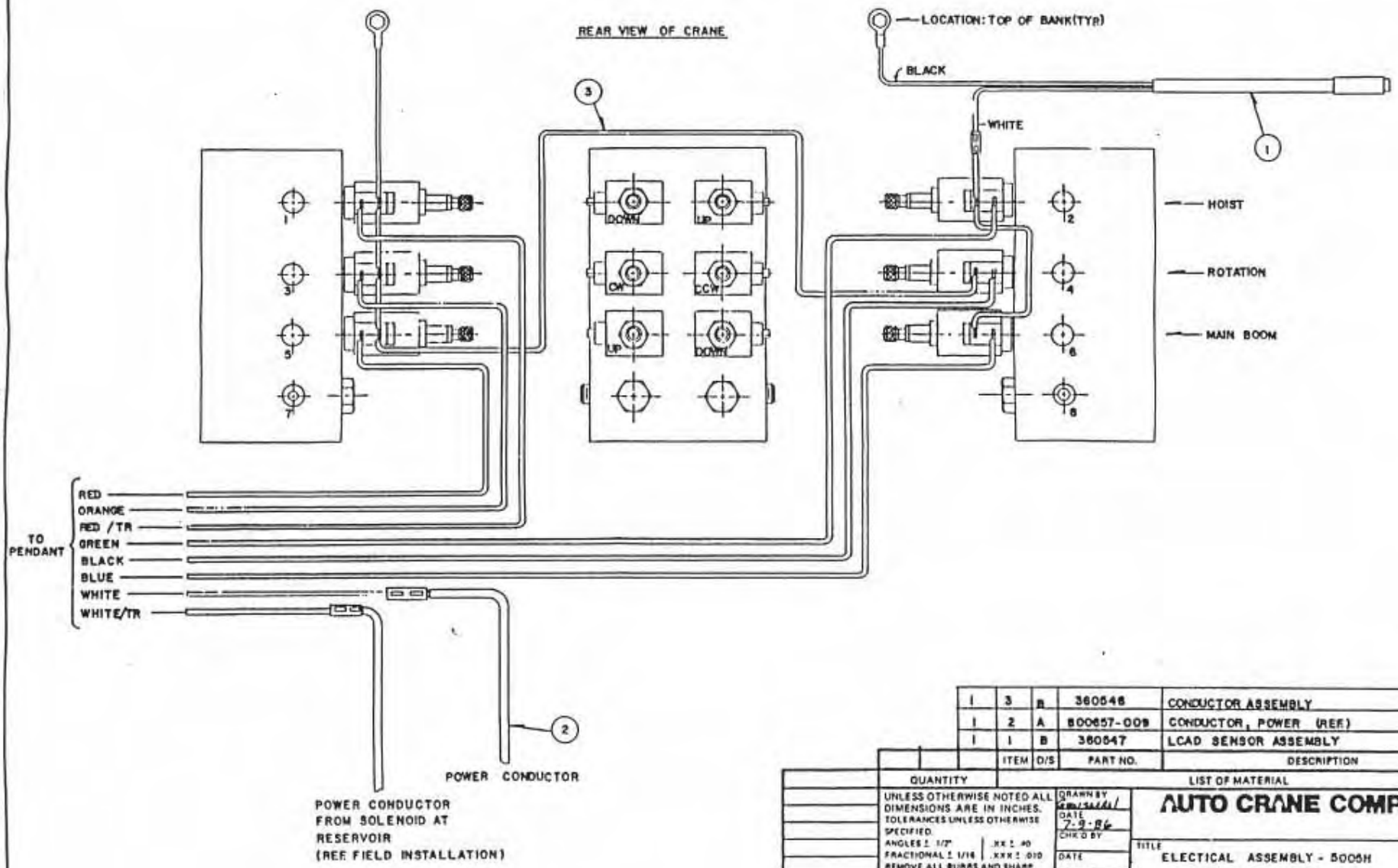

ITEM	Q/S	PART NO.	DESCRIPTION
1	3	B	360546	CONDUCTOR ASSEMBLY
1	2	A	800657-009	CONDUCTOR, POWER (REF)
1	1	B	360547	LOAD SENSOR ASSEMBLY

QUANTITY — LIST OF MATERIAL

UNLESS OTHERWISE NOTED ALL DIMENSIONS ARE IN INCHES. TOLERANCES UNLESS OTHERWISE SPECIFIED. ANGLES ± 1/2° | .XX ± .10 FRACTIONAL ± 1/16 | .XXX ± .010 REMOVE ALL BURRS AND SHARP EDGES. DO NOT SCALE THIS DRAWING. TOLERANCES NOT SHOWN ABOVE ARE PER ANSI Y14.5-1973

DRAWN BY [illegible] DATE 7-9-86 CHK'D BY DATE ENG. BY DATE

THIS PRINT IS THE PROPERTY OF AUTO CRANE CO. AND MUST NOT BE USED IN ANY MANNER DETRIMENTAL TO THEIR INTERESTS

NEXT ASS'Y

AUTO CRANE COMPANY

TITLE: ELECTICAL ASSEMBLY - 5005H MANUAL EXTENSION

SCALE	SIZE	DRAWING NO.	REVISION
—	C	AW-360548	—

WEIGHT — SHEET 1 OF 1

12/86

5-1.0.0

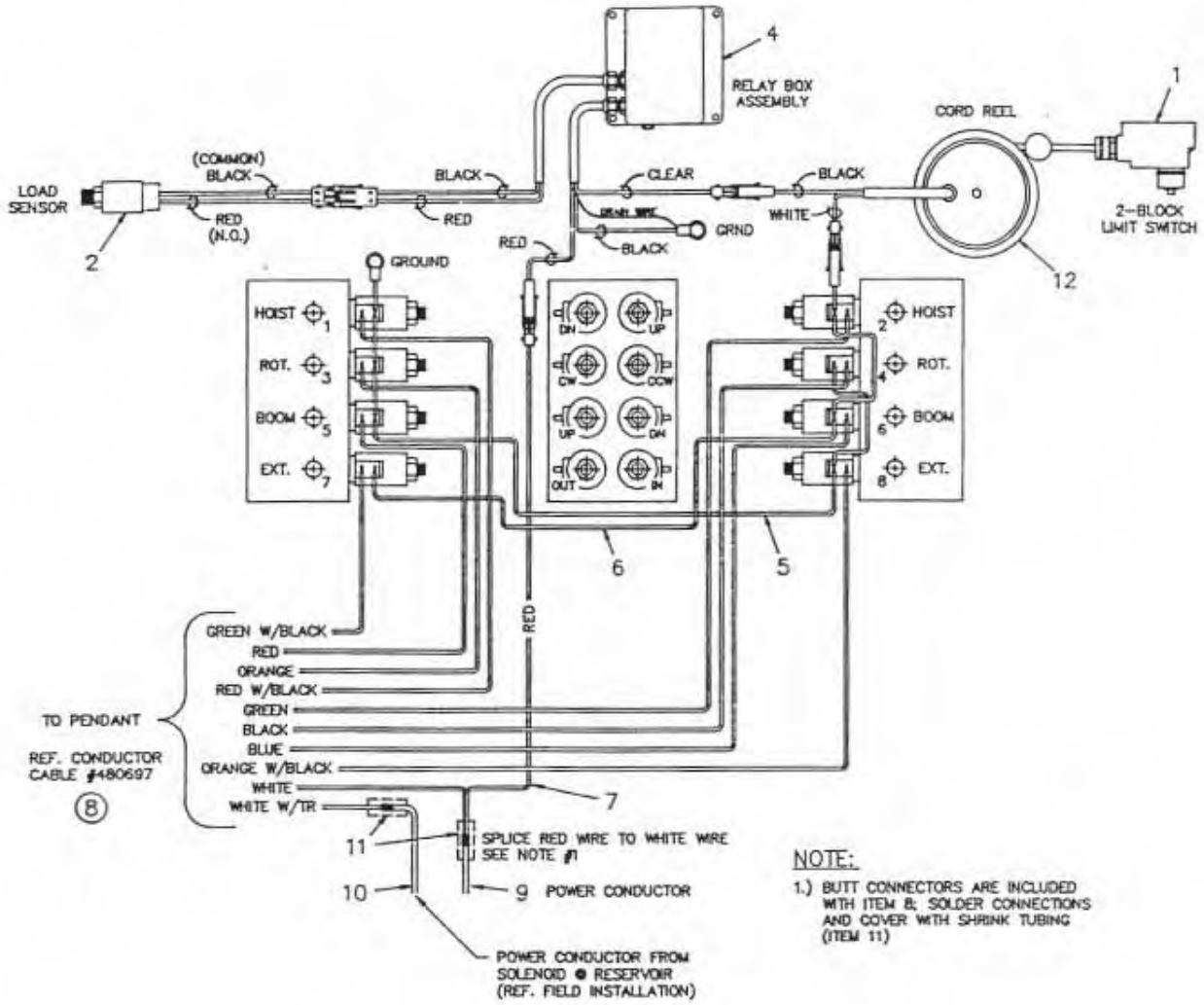

NOTE:

1.) BUTT CONNECTORS ARE INCLUDED WITH ITEM 8; SOLDER CONNECTIONS AND COVER WITH SHRINK TUBING (ITEM 11)

ITEM	QTY	PART NO.	DESCRIPTION
1	1	646900	SWITCH
2	1	320543	LOAD SENSOR ASSY
3	-	-	-
4	1	366986	RELAY BOX ASSY
5	1	360549	CONDUCTOR ASSY (POWER EXT.)
6	1	480384	CONDUCTOR ASSY
7	1	480385	CONDUCTOR ASSY
8	1	480697	CONDUCTOR CABLE (REF.)
9	1	800657-009	CONDUCTOR, POWER
10	1	366030	CONDUCTOR
11	2	366995	1/4" SHRINK TBG x 3" LG
12	1	366973-001	CORD REEL ASSY

AW-366200
5005H & 6006H ELECTRICAL ASSEMBLY

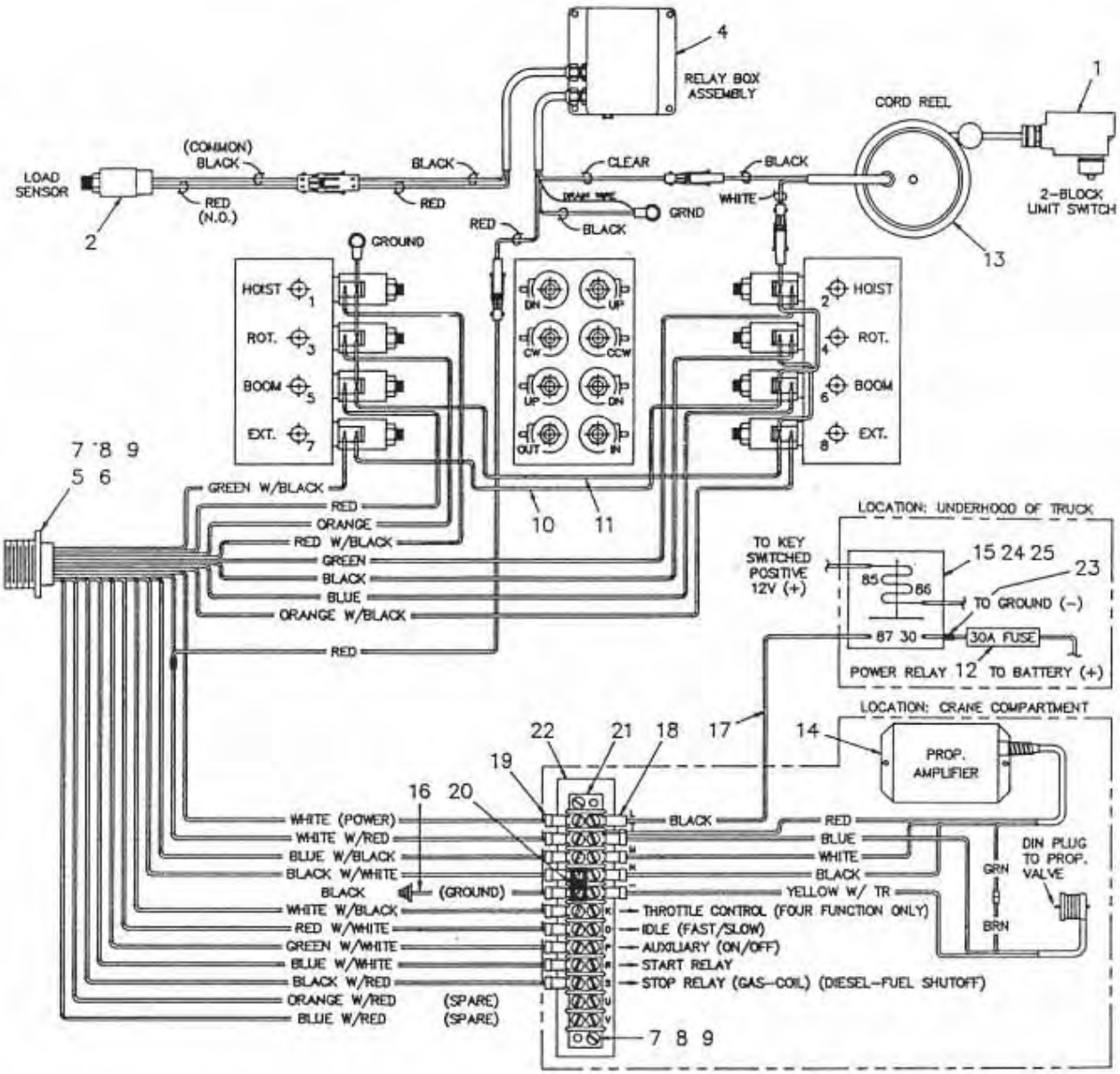

ITEM	QTY	PART NO.	DESCRIPTION
1	1	646900	SWITCH
2	1	320543	LOAD SENSOR ASSY
3	-	-	-
4	1	366986	RELAY BOX ASSY
5	1	480597	RECEPTACLE ASSY
6	1	480547	CAP, PENDANT RECEPTACLE
7	4	000404	SCREW, RD HD #6-32 x 5/8" LG.
8	4	019600	WASHER, SP LK #6
9	4	015400	NUT, HX #6-32
10	1	480384	CONDUCTOR ASSY
11	1	360549	CONDUCTOR ASSY (POWER EXT.)
12	1	750167	FUSE, IN-LINE 30 AMP
13	1	366973-001	CORD REEL ASSY

ITEM	QTY	PART NO.	DESCRIPTION
14	1	480522	AMPLIFIER ASSY, PROPORTIONAL
15	1	320355	POWER RELAY
16	1	480549	CONDUCTOR, 16 Ga BLACK
17	1	800657-009	CONDUCTOR, POWER
18	1	001002	TERMINAL, RING
19	15	480495	TERMINAL, FLG'D SPADE (16-14 WIRE)
20	1	636600	JUMPER
21	1	635200	TERMINAL BLOCK
22	1	360610	DECAL, TERMINAL I.D.
23	2	001102	TERMINAL, WR 2RC-10
24	1	320363	PLUG, RELAY
25	5	320357	CONNECTOR, SPD LOCKING, NON-INS

AW-353
CRANE WIRING, 5005H & 6006H
w/ 4 & 8 FUNCTION PENDANTS, PROPORTIONAL (-200,-400)

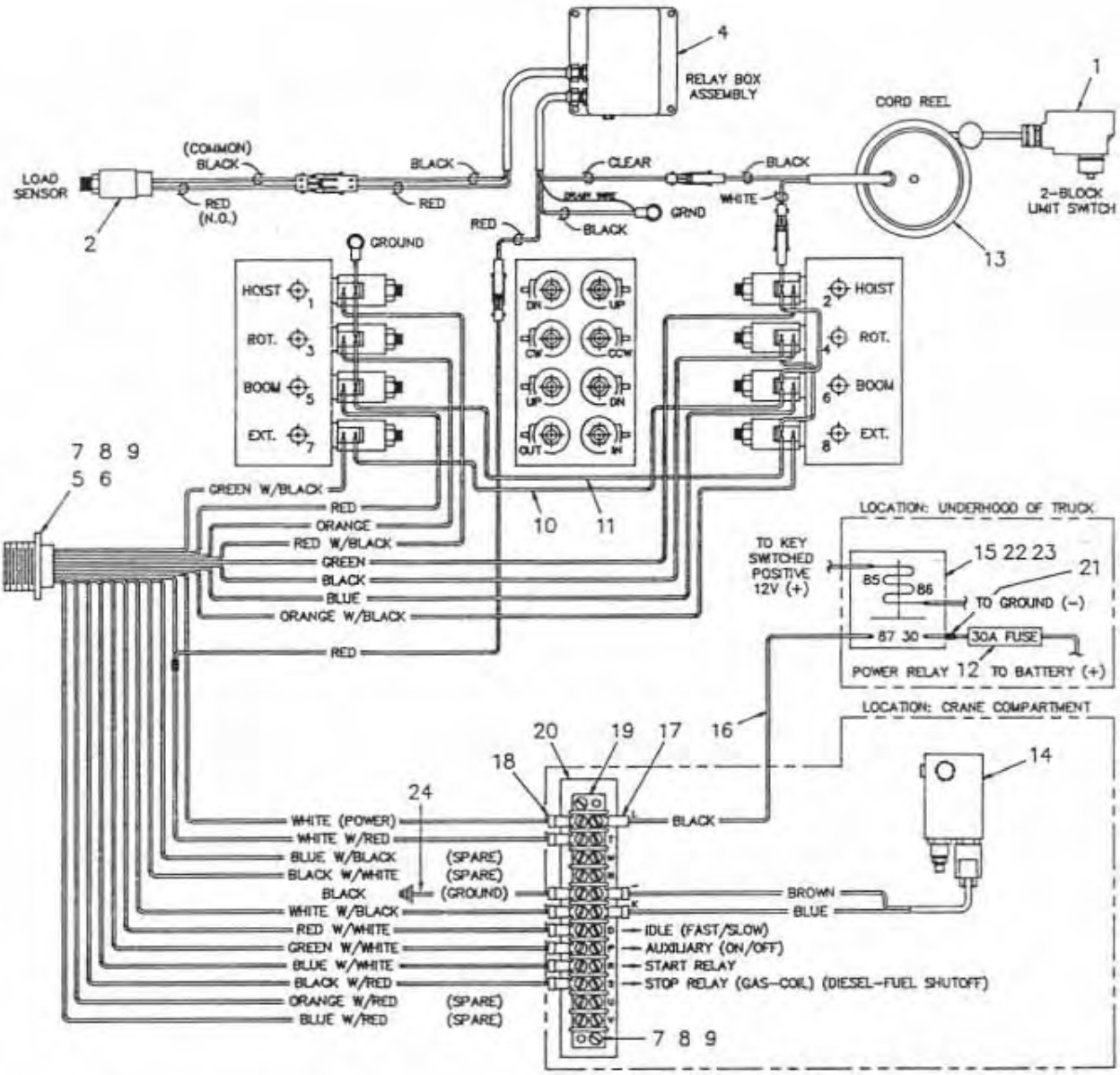

ITEM	QTY	PART NO.	DESCRIPTION
1	1	646900	SWITCH
2	1	320543	LOAD SENSOR ASSY
3	-	-	-
4	1	366986	RELAY BOX ASSY
5	1	480597	RECEPTACLE ASSY
6	1	480547	CAP, PENDANT RECEPTACLE
7	4	000404	SCREW, RD HD #6-32 x 5/8" LG.
8	4	019600	WASHER, SP LK #6
9	4	015400	NUT, HX #6-32
10	1	480384	CONDUCTOR ASSY
11	1	360549	CONDUCTOR ASSY (POWER EXT.)
12	1	750167	FUSE, IN-LINE 30 AMP

ITEM	QTY	PART NO.	DESCRIPTION
13	1	366973-001	CORD REEL ASSY
14	1	366212	RELIEF VALVE ASSY w/ SOLENOID
15	1	320355	POWER RELAY
16	1	800657-009	CONDUCTOR, POWER
17	1	001002	TERMINAL, RING
18	10	480495	TERMINAL, FLG'D SPADE (16-14 WIRE)
19	1	635200	TERMINAL BLOCK
20	1	360610	DECAL, TERMINAL I.D.
21	1	001102	TERMINAL, WR 2RC-10
22	1	320363	PLUG, RELAY
23	5	320357	CONNECTOR, SPD LOCKING, NON-INS
24	1	480549	CONDUCTOR, 16 Ga BLACK

AW-354
CRANE WIRING, 5005H & 6006H
w/ 4 & 8 FUNCTION PENDANTS, LESS PROPORTIONAL (-100,-300)

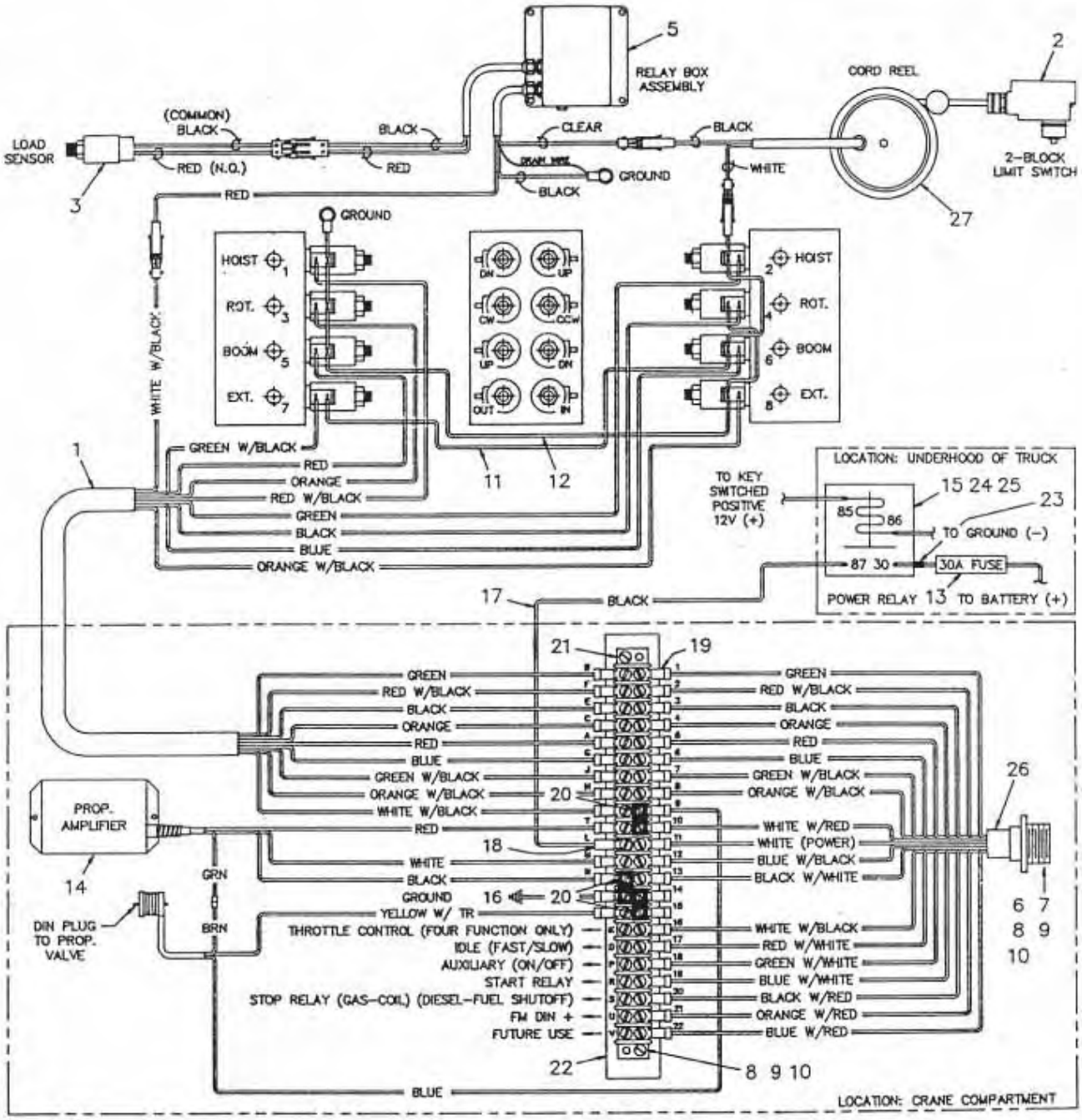

ITEM	QTY	PART NO.	DESCRIPTION	ITEM	QTY	PART NO.	DESCRIPTION
1	1	480386	HARNESS, CRANE PIGTAIL	15	1	320355	POWER RELAY
2	1	646900	SWITCH	16	1	480549	CONDUCTOR, 16 Ga BLACK
3	1	320543	LOAD SENSOR ASSY	17	1	800657-009	CONDUCTOR, POWER
4	-	-	-	18	1	001002	TERMINAL, RING
5	1	366986	RELAY BOX ASSY	19	36	480495	TERMINAL, FLG'D SPADE (16-14 WIRE)
6	1	480626	BRACKET, PENDANT RECEPTACLE	20	3	636600	JUMPER
7	1	480547	CAP, PENDANT RECEPTACLE	21	1	480494	TERMINAL BLOCK, 22 STA
8	4	000404	SCREW, RD HD #6-32 x 5/8" LG.	22	1	480490	DECAL, 22 STA TERMINAL BLOCK
9	4	019600	WASHER, SP LK #6	23	1	001102	TERMINAL, WR 2RC-10
10	4	015400	NUT, HX #6-32	24	1	320363	PLUG, RELAY
11	1	480384	CONDUCTOR ASSY	25	5	320357	CONNECTOR, SPD LOCKING, NON-INS
12	1	360549	CONDUCTOR ASSY (POWER EXT.)	* 26	1	480491	HARNESS ASSY
13	1	750167	FUSE, IN-LINE 30 AMP	27	1	366973-001	CORD REEL ASSY
14	1	480522	AMPLIFIER ASSY, PROP.				

* NOTE: ITEM 26 INCLUDES ITEMS 19, 20 & 21

AW-355
CRANE WIRING, 5005H & 6006H
w/ 4 & 8 FUNCTION PENDANTS, PROP. IC (-210,-410,-411,-412)

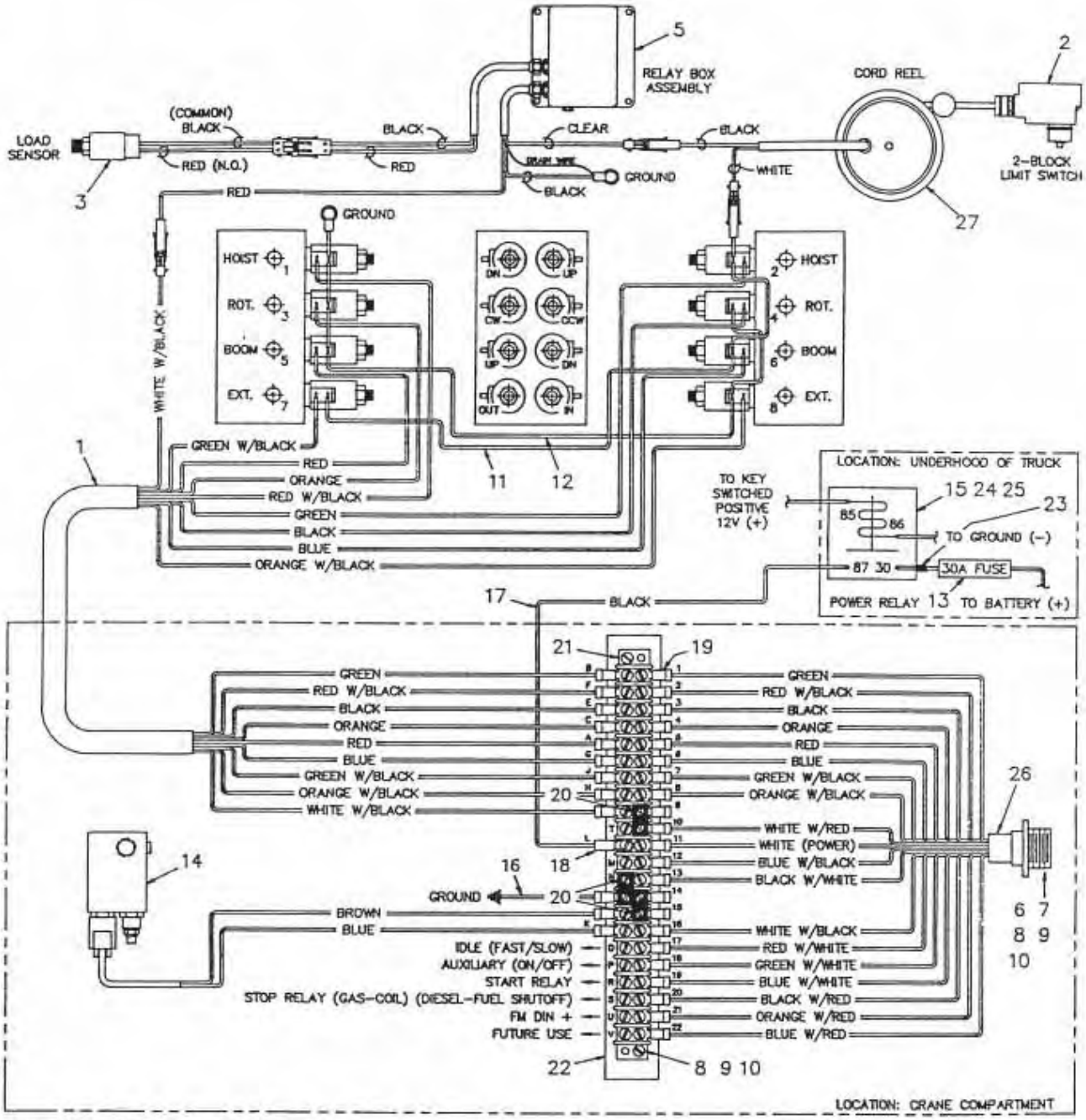

ITEM	QTY	PART NO.	DESCRIPTION
1	1	480386	HARNESS, CRANE PIGTAIL
2	1	646900	SWITCH
3	1	320543	LOAD SENSOR ASSY
4	.	.	.
5	1	366986	RELAY BOX ASSY
6	1	480626	BRACKET, PENDANT RECEPTACLE
7	1	480547	CAP, PENDANT RECEPTACLE
8	4	000404	SCREW, RD HD #6-32 x 5/8" LG.
9	4	019600	WASHER, SP LK #6
10	4	015400	NUT, HX #6-32
11	1	480384	CONDUCTOR ASSY
12	1	360549	CONDUCTOR ASSY (POWER EXT.)
13	1	750167	FUSE, IN-LINE 30 AMP
14	1	366212	RELIEF VALVE ASSY w/ SOLENOID

ITEM	QTY	PART NO.	DESCRIPTION
15	1	320355	POWER RELAY
16	1	480549	CONDUCTOR, 16 Ga BLACK
17	1	800657-009	CONDUCTOR, POWER
18	1	001002	TERMINAL, RING
19	34	480495	TERMINAL, FLG'D SPADE (16-14 WIRE)
20	3	636600	JUMPER
21	1	480494	TERMINAL BLOCK, 22 STA
22	1	480490	DECAL, 22 STA TERMINAL BLOCK
23	1	001102	TERMINAL, WR 2RC-10
24	1	320363	PLUG, RELAY
25	5	320357	CONNECTOR, SPD LOCKING, NON-INS
* 26	1	480491	HARNESS ASSY
27	1	366973-001	CORD REEL ASSY

* NOTE: ITEM 26 INCLUDES ITEMS 19, 20 & 21

AW-356
CRANE WIRING, 5005H & 6006H
w/ 4 & 8 FUNCTION PENDANTS, LESS PROP. IC (-110,-310)

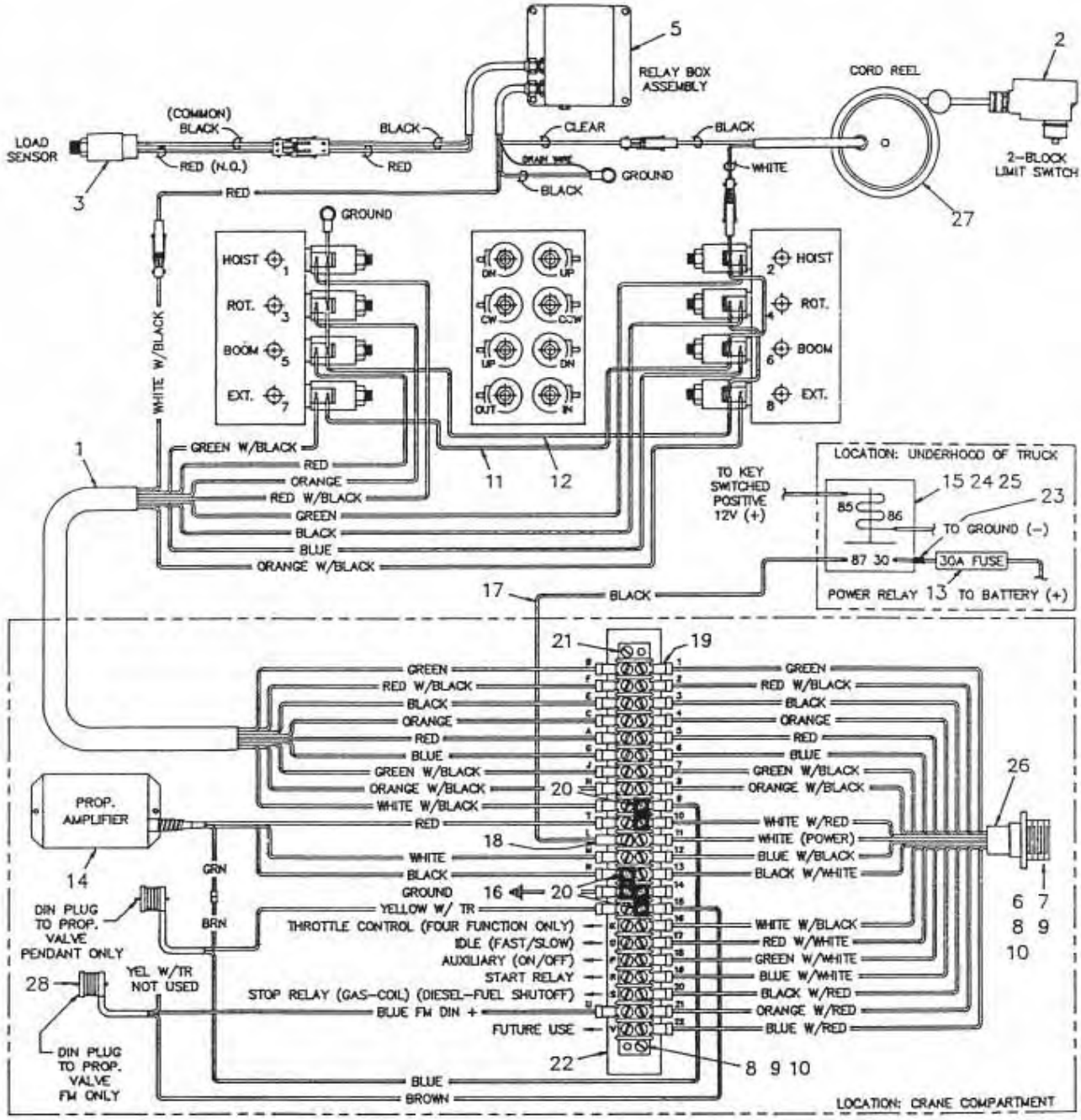

ITEM	QTY	PART NO.	DESCRIPTION	ITEM	QTY	PART NO.	DESCRIPTION
1	1	480386	HARNESS, CRANE PIGTAIL	15	1	320355	POWER RELAY
2	1	646900	SWITCH	16	1	480549	CONDUCTOR, 16 Ga BLACK
3	1	320543	LOAD SENSOR ASSY	17	1	800657-009	CONDUCTOR, POWER
4	.	.	.	18	1	001002	TERMINAL, RING
5	1	366986	RELAY BOX ASSY	19	37	480495	TERMINAL, FLG'D SPADE (16-14 WIRE)
6	1	480626	BRACKET, PENDANT RECEPTACLE	20	3	636600	JUMPER
7	1	480547	CAP, PENDANT RECEPTACLE	21	1	480494	TERMINAL BLOCK, 22 STA
8	4	000404	SCREW, RD HD #6-32 x 5/8" LG.	22	1	480490	DECAL, 22 STA TERMINAL BLOCK
9	4	019600	WASHER, SP LK #6	23	1	001102	TERMINAL, WR 2RC-10
10	4	015400	NUT, HX #6-32	24	1	320363	PLUG, RELAY
11	1	480384	CONDUCTOR ASSY	25	5	320357	CONNECTOR, SPD LOCKING, NON-INS
12	1	360549	CONDUCTOR ASSY (POWER EXT.)	* 26	1	480491	HARNESS ASSY
13	1	750167	FUSE, IN-LINE 30 AMP	27	1	366973-001	CORD REEL ASSY
14	1	480522	AMPLIFIER ASSY, PROP.	28	1	480613	DIN CONNECTOR w/ CORD

* NOTE: ITEM 26 INCLUDES ITEMS 19, 20 & 21

AW-357

CRANE WIRING, 5005H & 6006H

8 FUNCTION PENDANT PROP. IC & 12 FUNCTION FM REMOTE (-510,-530)

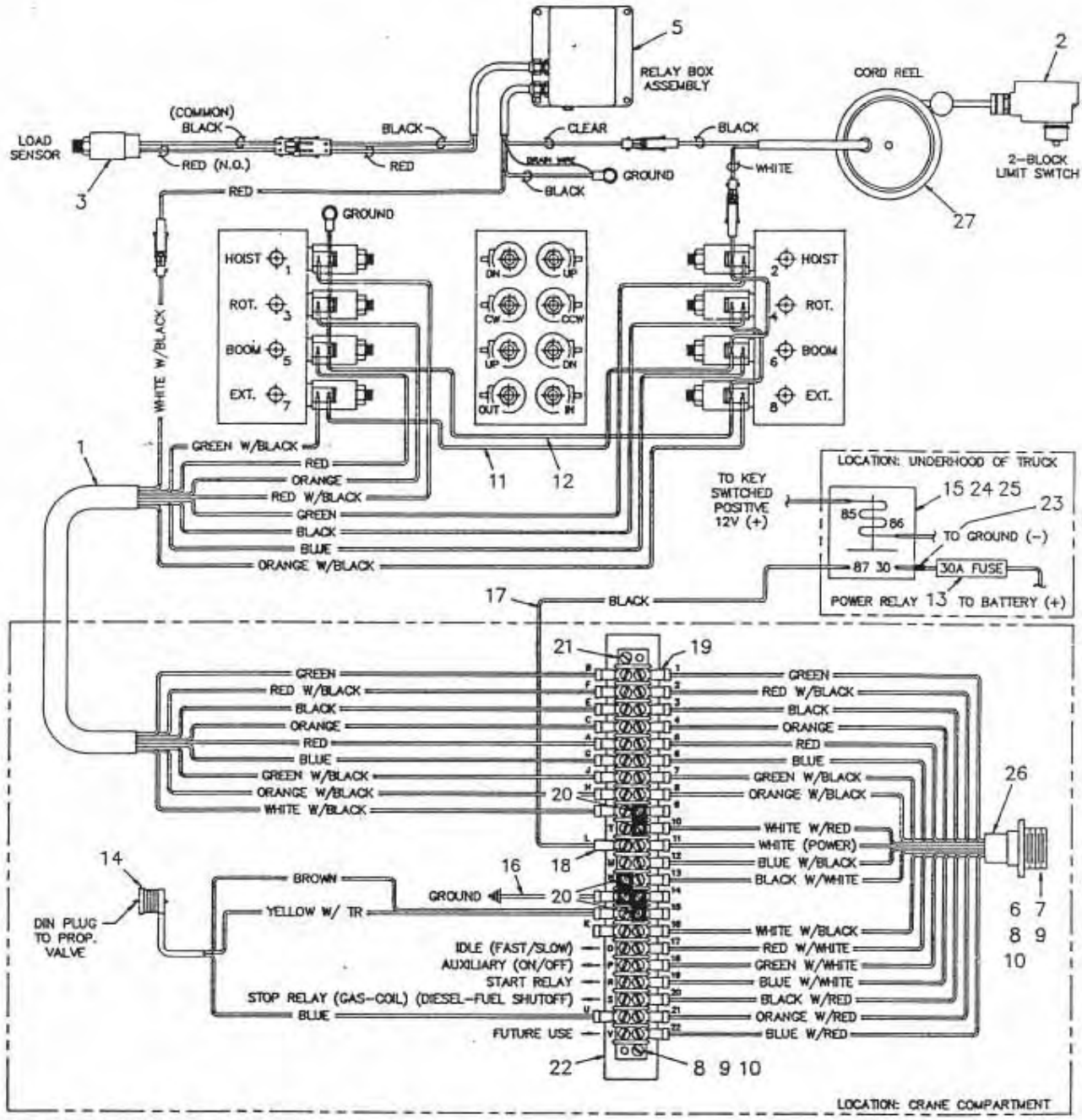

ITEM	QTY	PART NO.	DESCRIPTION
1	1	480386	HARNESS, CRANE PIGTAIL
2	1	646900	SWITCH
3	1	320543	LOAD SENSOR ASSY
4	.	.	.
5	1	366986	RELAY BOX ASSY
6	1	480626	BRACKET, PENDANT RECEPTACLE
7	1	480547	CAP, PENDANT RECEPTACLE
8	4	000404	SCREW, RD HD #6-32 x 5/8" LG.
9	4	019600	WASHER, SP LK #6
10	4	015400	NUT, HX #6-32
11	1	480384	CONDUCTOR ASSY
12	1	360549	CONDUCTOR ASSY (POWER EXT.)
13	1	750167	FUSE, IN-LINE 30 AMP
14	1	480612	DIN PLUG ASSY

ITEM	QTY	PART NO.	DESCRIPTION
15	1	320355	POWER RELAY
16	1	480549	CONDUCTOR, 16 Ga BLACK
17	1	800657-009	CONDUCTOR, POWER
18	1	001002	TERMINAL, RING
19	34	480495	TERMINAL, FLG'D SPADE (16-14 WIRE)
20	3	636600	JUMPER
21	1	480494	TERMINAL BLOCK, 22 STA
22	1	480490	DECAL, 22 STA TERMINAL BLOCK
23	1	001102	TERMINAL, WR 2RC-10
24	1	320363	PLUG, RELAY
25	5	320357	CONNECTOR, SPD LOCKING, NON-INS
* 26	1	480491	HARNESS ASSY
27	1	366973-001	CORD REEL ASSY

* NOTE: ITEM 26 INCLUDES ITEMS 19, 20 & 21

AW-358
CRANE WIRING, 5005H & 6006H
w/ FM REMOTE, PROPORTIONAL (-500,-520)

WIRING GUIDE

A–RED
B–GREEN
C–ORANGE
D–RED W/WHITE T
E–BLACK
F–RED W/ BLACK T
G–BLUE
H–ORANGE W/BLACK T
J–GREEN W/BLACK T
K–WHITE W/BLACK T
L–WHITE
M–BLUE W/BLACK T
N–BLACK W/WHITE T
P–GREEN W/WHITE T
R–BLUE W/WHITE T
S–BLACK W/RED T
T–WHITE W/RED T
U–ORANGE W/RED T
V–BLUE W/RED T

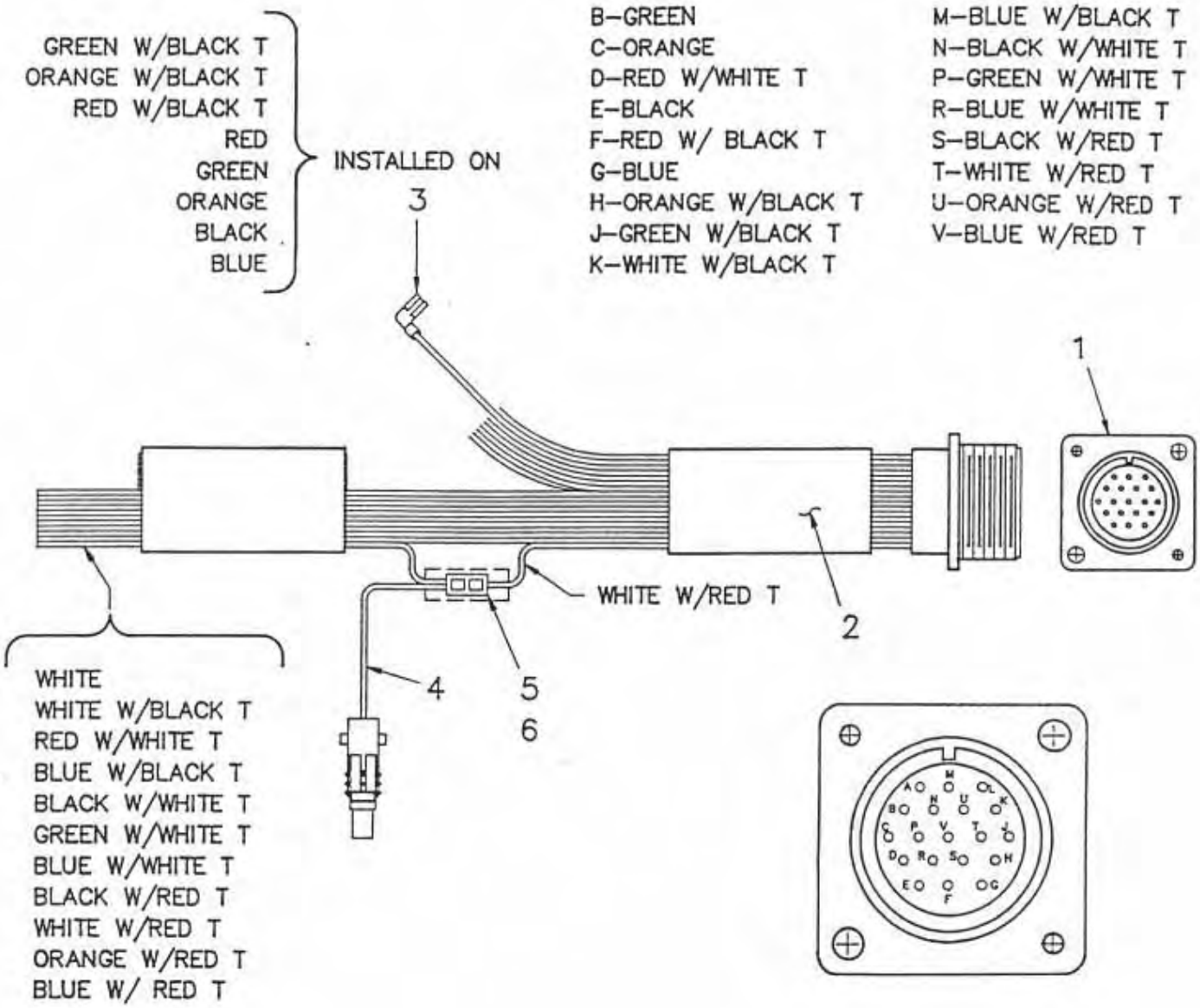

ITEM	QTY	P/N	DESCRIPTION
1	1	480542	RECEPTACLE (19 PIN)
2	1	480594–002	CONDUCTOR 16 Ga/19 CON. x 8'–0" LG.
3	8	000405	TERMINAL, FLAG
4	1	480385	CONDUCTOR ASSEMBLY, WEATHER PACK
5	1	001105	TERMINAL, BUTT CONNECTOR NON–INS
6	3"	366995	1/4" SHRINK TUBING

AW–480597
PENDANT RECEPTACLE ASSEMBLY

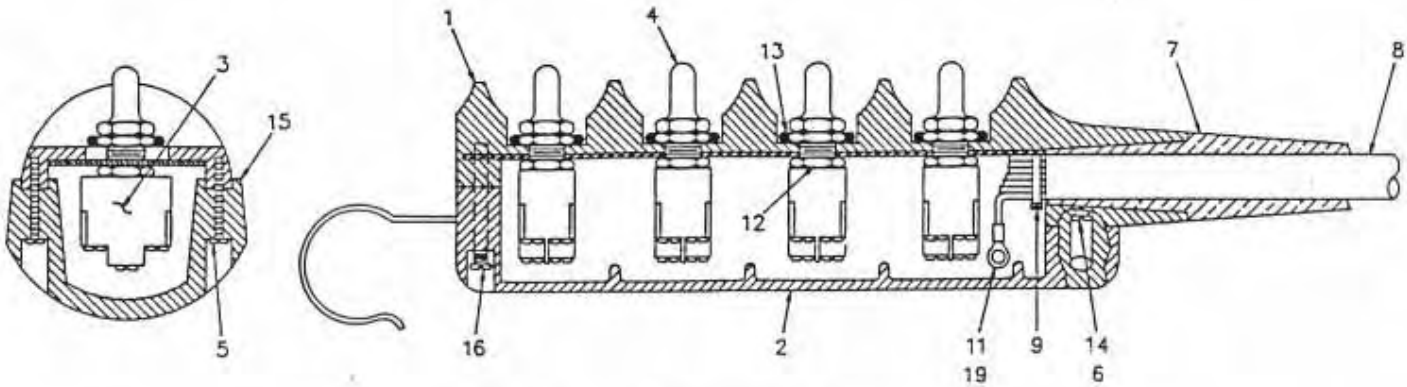

WIRING GUIDE

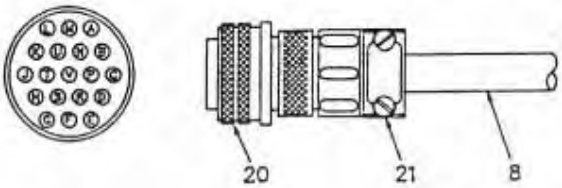

A–RED
B–GREEN
C–ORANGE
D–RED W/WHITE T
E–BLACK
F–RED W/BLACK T
G–BLUE
H–ORANGE W/BLACK T
J–GREEN W/BLACK T
K–WHITE W/BLACK T
L–WHITE
M–BLUE W/BLACK T
N–BLACK W/WHITE T
P–GREEN W/WHITE T
R–BLUE W/WHITE T
S–BLACK W/RED T
T–WHITE W/RED T
U–ORANGE W/RED T
V–BLUE W/RED T

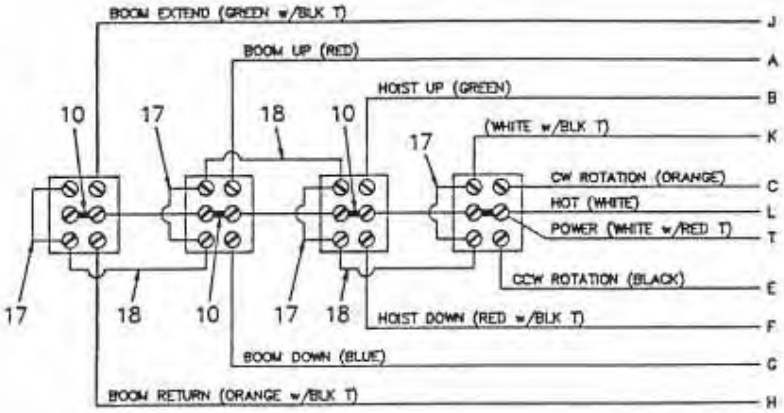

VIEW FROM BOTTOM

ITEM	QTY	P/N	DESCRIPTION
1	1	631601	PENDANT HOUSING
2	1	631700	COVER, BOTTOM
3	4	634200	SWITCH, TOGGLE
4	4	640302	BOOT, TOGGLE SWITCH
5	10	005001	SCREW, PAN HD. #8 x 3/4
6	2	005101	SCREW, PAN HD. #8 x 1 1/4
7	1	633801	ADAPTER, CABLE
8	1	480594–001	CONDUCTOR CABLE (19 COND.)
9	2	634401	CABLE TIE
10	4	636600	JUMPER

ITEM	QTY	P/N	DESCRIPTION
11	2	000101	TERMINAL, RING #6/14–16 Ga.
12	4	675271	NUT, HEX
13	4	642100	"O"–RING
14	4	019700	WASHER, SP. LK. #8
15	21"	800580	3/4" OKONITE RUBBER TAPE
16	1	004700	SCREW, PAN HD. #8 x 1 1/2
17	4	622346	CONDUCTOR ASSY 2 1/8" LG.
18	3	622347	CONDUCTOR ASSY 3 1/8" LG.
19	1	002012	TERMINAL, RING #6/18–22 Ga.
20	1	480514	PLUG, CONNECTOR
21	1	480515	CLAMP, CABLE

AW–480540
PENDANT ASSEMBLY, 4 FUNCTION
REMOVABLE w/ 19 PIN CONNECTOR

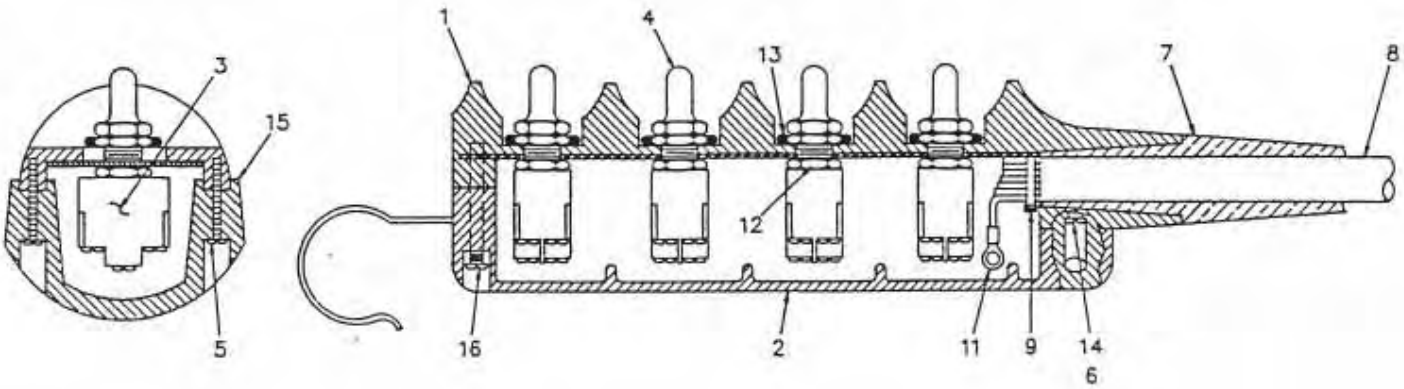

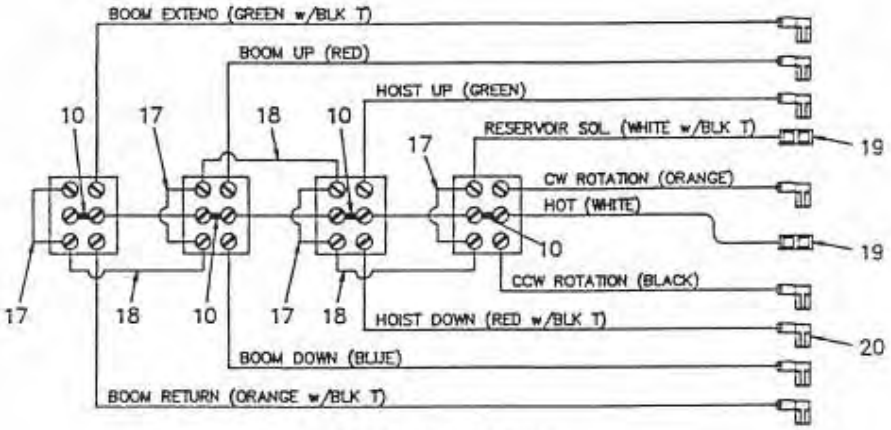

VIEW FROM BOTTOM

ITEM	QTY	P/N	DESCRIPTION
1	1	631601	PENDANT HOUSING
2	1	631700	COVER, BOTTOM
3	4	634200	SWITCH, TOGGLE
4	4	640302	BOOT, TOGGLE SWITCH
5	10	005001	SCREW, PAN HD. #8 x 3/4
6	2	005101	SCREW, PAN HD. #8 x 1 1/4
7	1	633801	ADAPTER, CABLE
8	1	800632-004	CONDUCTOR CABLE (27')
9	2	634401	CABLE TIE
10	4	636600	JUMPER

ITEM	QTY	P/N	DESCRIPTION
11	10	000101	TERMINAL, RING
12	4	675271	NUT, HEX
13	4	642100	"O"-RING
14	4	019700	WASHER, SP. LK. #8
15	21"	800580	3/4" OKONITE RUBBER TAPE
16	1	004700	SCREW, PAN HD. #8 x 1 1/2
17	4	622346	CONDUCTOR ASSY 2 1/8" LG.
18	3	622347	CONDUCTOR ASSY 3 1/8" LG.
19	2	001102	SPLICE, BUTT (REF.)
20	8	000405	TERMINAL, FLAG (REF.)

NOTE:
ITEMS 19 & 20 ARE INCLUDED WITH ITEM 8

AW-480093
PENDANT ASSEMBLY
4 FUNCTION, NONREMOVABLE

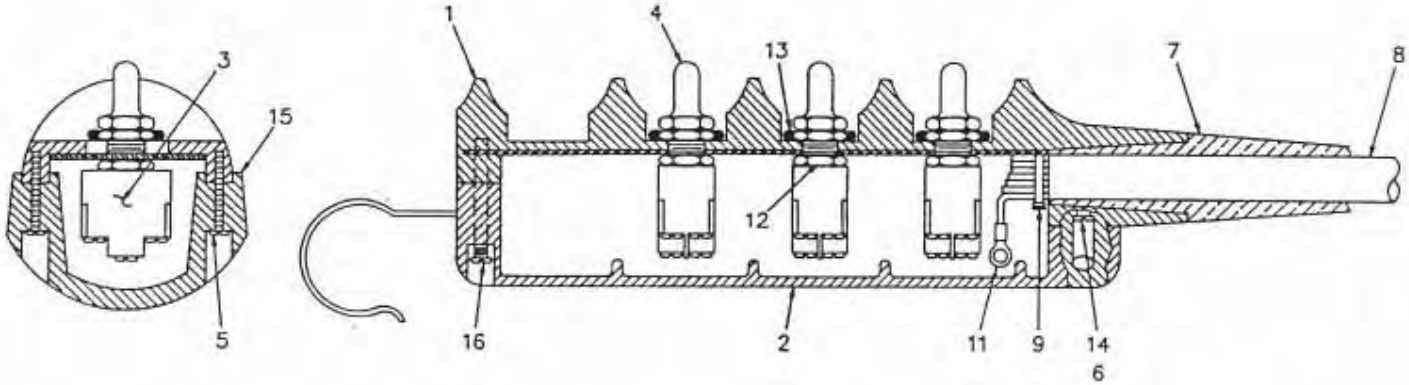

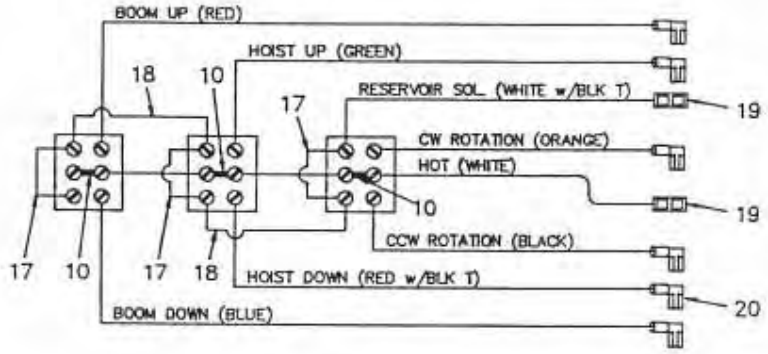

VIEW FROM BOTTOM

ITEM	QTY	P/N	DESCRIPTION
1	1	631602	PENDANT HOUSING
2	1	631700	COVER, BOTTOM
3	3	634200	SWITCH, TOGGLE
4	3	640302	BOOT, TOGGLE SWITCH
5	10	005001	SCREW, PAN HD. #8 x 3/4
6	2	005101	SCREW, PAN HD. #8 x 1 1/4
7	1	633801	ADAPTER, CABLE
8	1	360281	CONDUCTOR CABLE (23')
9	2	634401	CABLE TIE
10	3	636600	JUMPER

ITEM	QTY	P/N	DESCRIPTION
11	22	000101	TERMINAL, RING
12	3	675271	NUT, HEX
13	3	642100	"O"-RING
14	4	019700	WASHER, SP. LK. #8
15	21"	800580	3/4" OKONITE RUBBER TAPE
16	1	004700	SCREW, PAN HD. #8 x 1 1/2
17	3	622346-001	CONDUCTOR ASSY 2 1/8" LG.
18	2	622346-002	CONDUCTOR ASSY 3 3/8" LG.
19	2	001102	SPLICE, BUTT (REF.)
20	6	000405	TERMINAL, FLAG (REF.)

NOTE:
ITEMS 19 & 20 ARE INCLUDED WITH ITEM 8

AW-360522
PENDANT ASSEMBLY
3 FUNCTION, NONREMOVABLE

NOTES

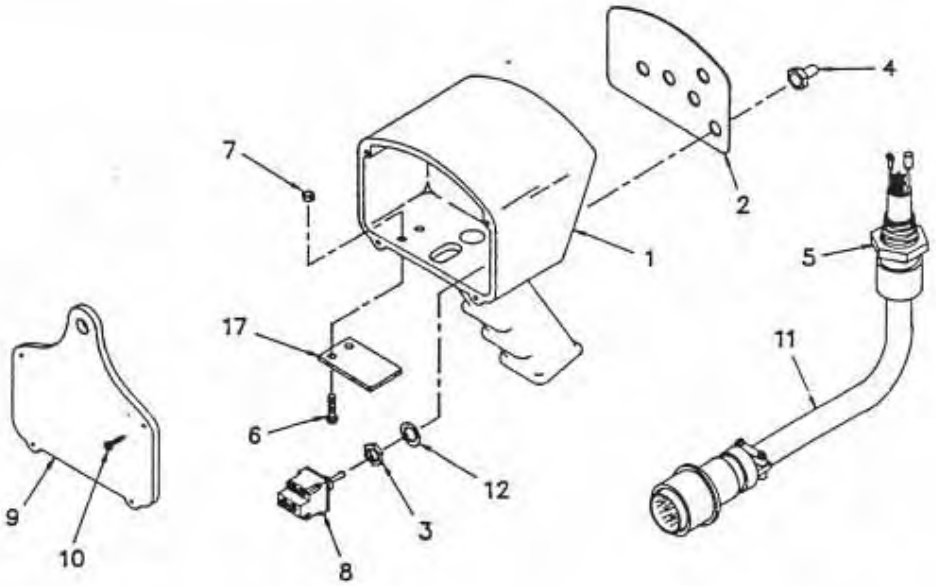

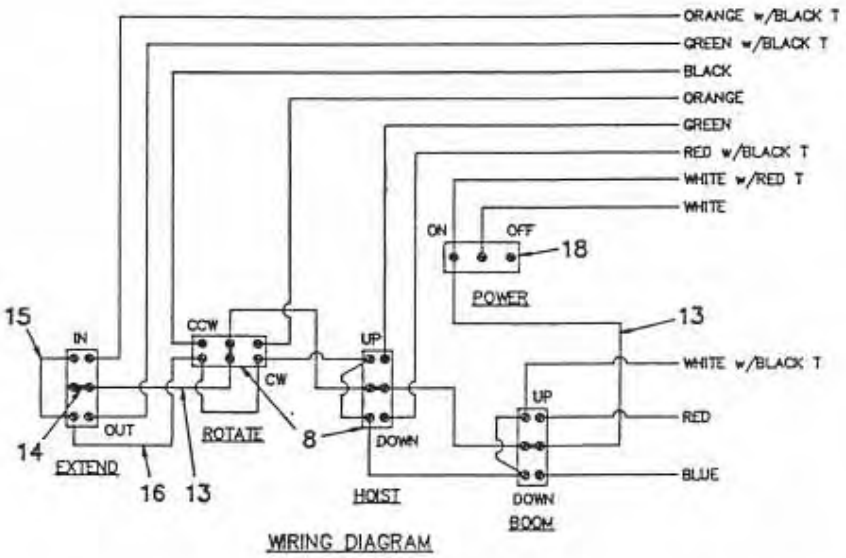

WIRING DIAGRAM

ITEM	QTY.	PART NO.	DESCRIPTION
1	1	480501	PENDANT HOUSING
2	1	480513	DECAL, COVER PLATE
3	5	REF.*	NUT
4	5	640300	BOOT, TOGGLE SWITCH
5	1	370433	CONNECTOR, HUBBEL F3
6	2	002607	SCREW, #10-24NC x 3/4
7	2	015801	NUT, HX. LK. #10-24NC
8	4	634200	SWITCH, TOGGLE DPDT
9	1	480504	BACK PLATE
10	4	480516	SCREW, S.T. RD. HD. #6 x 3/4
11	1	480595	CABLE ASSEMBLY
12	5	REF.*	WASHER, LOCK
13	4	660302	CONDUCTOR ASSEMBLY
14	4	636600	JUMPER
15	4	622346	CONDUCTOR ASSEMBLY 2 1/8"
16	3	622347	CONDUCTOR ASSEMBLY 3 1/8"
17	1	480598	COVER, TRIGGER OPENING
18	1	750090	SWITCH, TOGGLE ON/OFF
19	2	750737	TIE, CABLE

* COMES WITH ITEM 8

AW-480590
PENDANT ASSEMBLY
FOUR (4) FUNCTION, STANDARD

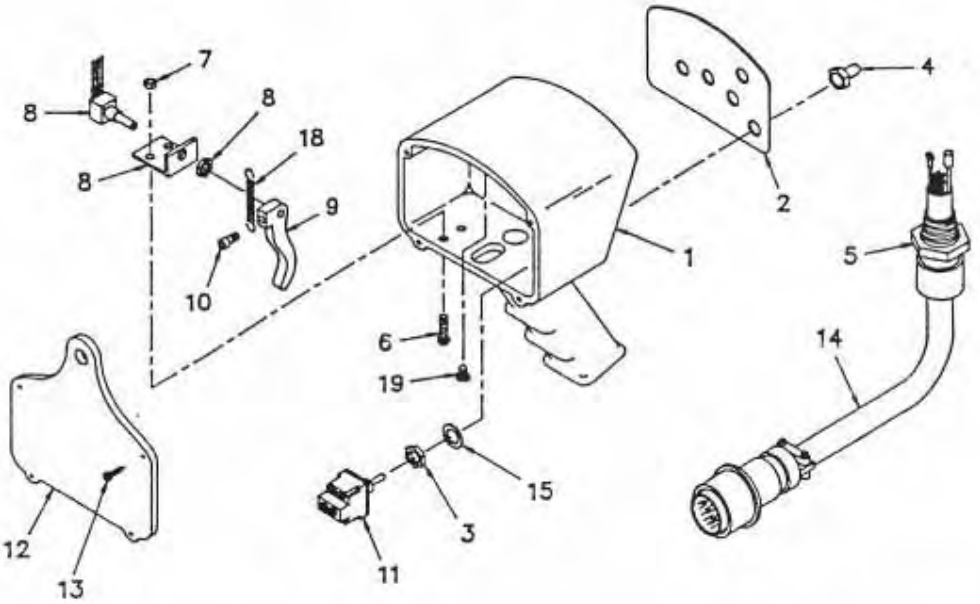

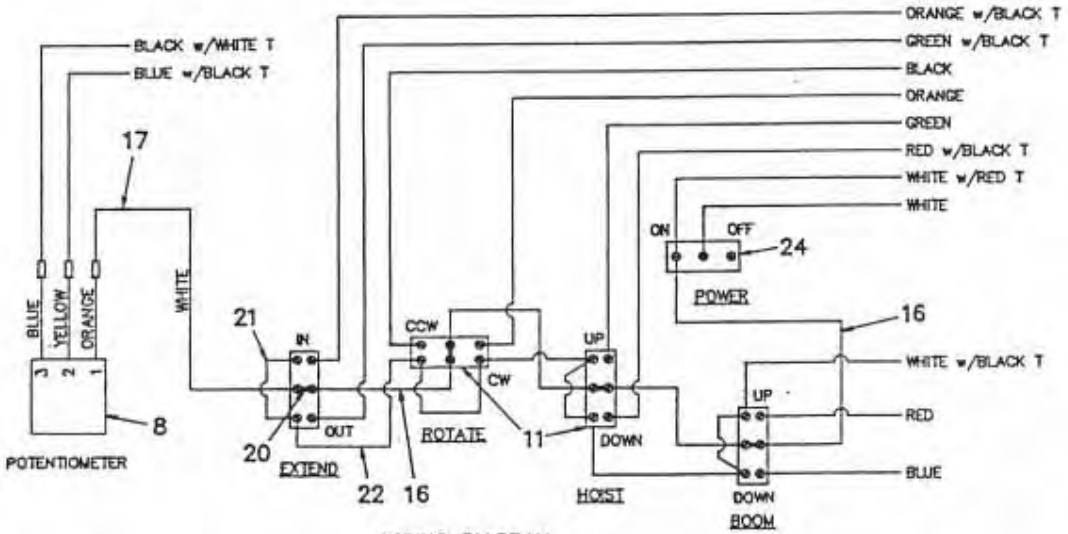

WIRING DIAGRAM

ITEM	QTY.	PART NO.	DESCRIPTION
1	1	480501	PENDANT HOUSING
2	1	480513	DECAL, COVER PLATE
3	4	REF.*	NUT
4	4	640300	BOOT, TOGGLE SWITCH
5	1	370433	CONNECTOR, HUBBEL F3
6	2	002607	SCREW, #10-24NC x 3/4
7	2	015801	NUT, HX. LK. #10-24NC
8	1	480507	POTENTIOMETER ASSEMBLY
9	1	480506	TRIGGER
10	1	480517	SCREW, SOC. HD. #10-32NF x 5/8
11	4	634200	SWITCH, TOGGLE DPDT
12	1	480504	BACK PLATE
13	4	480516	SCREW, S.T. RD. HD. #6 x 3/4
14	1	480596	CABLE ASSEMBLY
15	4	REF.*	WASHER, LOCK
16	4	660302	CONDUCTOR ASSEMBLY
17	1	480524	CONDUCTOR ASSEMBLY
18	1	480523	SPRING, TRIGGER RETURN
19	1	005003	SCREW, PAN HD. S.T. #6 x 3/8
20	4	636600	JUMPER
21	4	622346	CONDUCTOR ASSEMBLY 2 1/8"
22	3	622347	CONDUCTOR ASSEMBLY 3 1/8"
23	2	750737	TIE, CABLE
24	1	750090	SWITCH, TOGGLE ON/OFF

* COMES WITH ITEM 11

AW-480591
PROPORTIONAL PENDANT ASSEMBLY
FOUR (4) FUNCTION

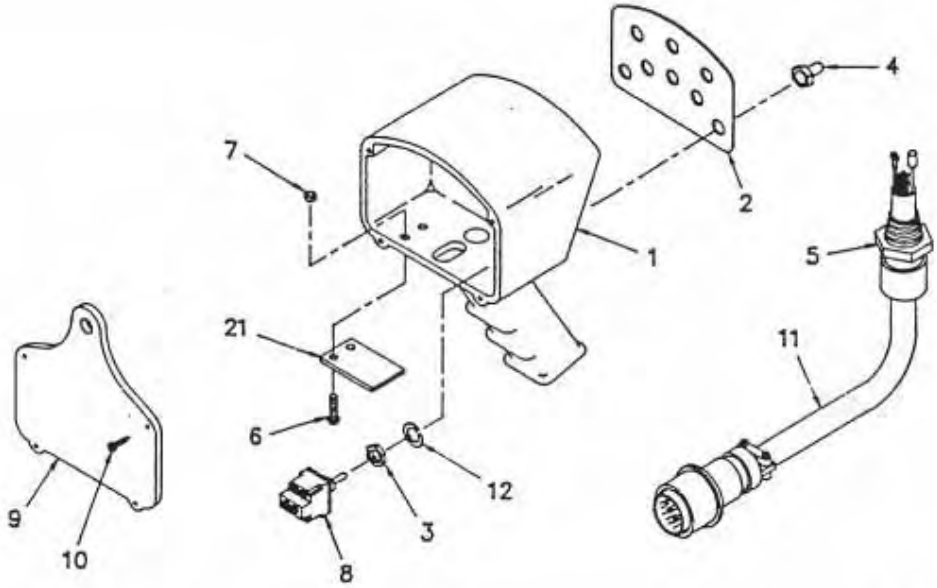

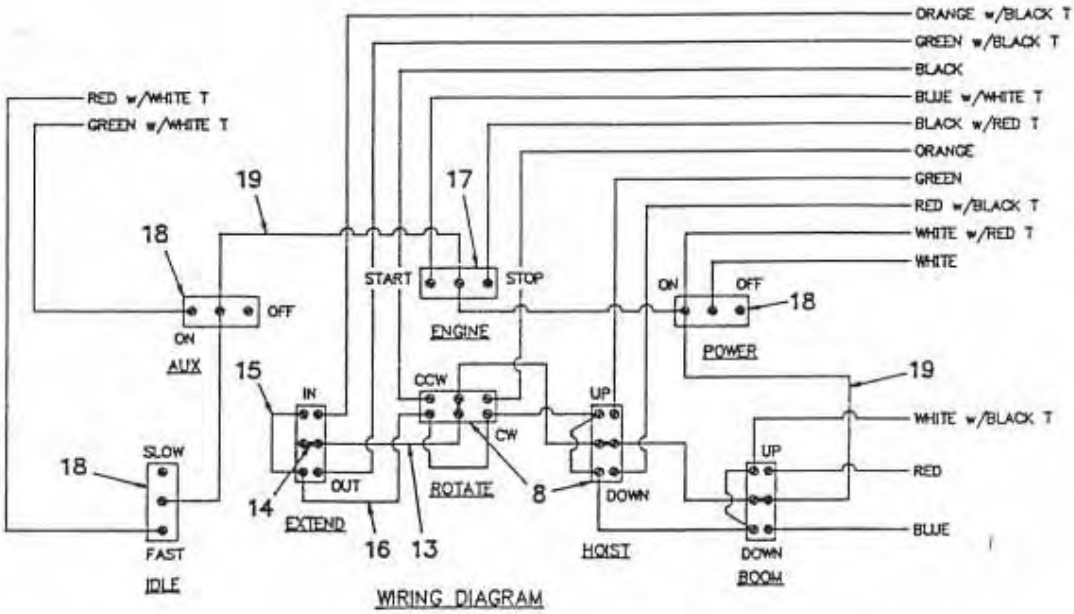

WIRING DIAGRAM

ITEM	QTY.	PART NO.	DESCRIPTION
1	1	480501	PENDANT HOUSING
2	1	480518	DECAL, COVER PLATE
3	8	REF.*	NUT
4	8	640300	BOOT, TOGGLE SWITCH
5	1	370433	CONNECTOR, HUBBEL F3
6	2	002607	SCREW, #10-24NC x 3/4
7	2	015801	NUT, HX. LK. #10-24NC
8	4	634200	SWITCH, TOGGLE DPDT
9	1	480504	BACK PLATE
10	4	480516	SCREW, S.T. RD. HD. #6 x 3/4
11	1	480588	CABLE ASSEMBLY
12	8	REF.*	WASHER, LOCK
13	3	660302	CONDUCTOR ASSEMBLY
14	4	636600	JUMPER
15	4	622346	CONDUCTOR ASSEMBLY 2 1/8"
16	3	622347	CONDUCTOR ASSEMBLY 3 1/8"
17	1	622000	SWITCH, TOGGLE SPDT
18	3	750090	SWITCH, TOGGLE ON/OFF
19	1	480526	CONDUCTOR ASSEMBLY
20	2	750737	TIE, CABLE
21	1	480598	COVER, TRIGGER OPENING

* COMES WITH ITEM 8

AW-480592
PENDANT ASSEMBLY
EIGHT (8) FUNCTION, STANDARD

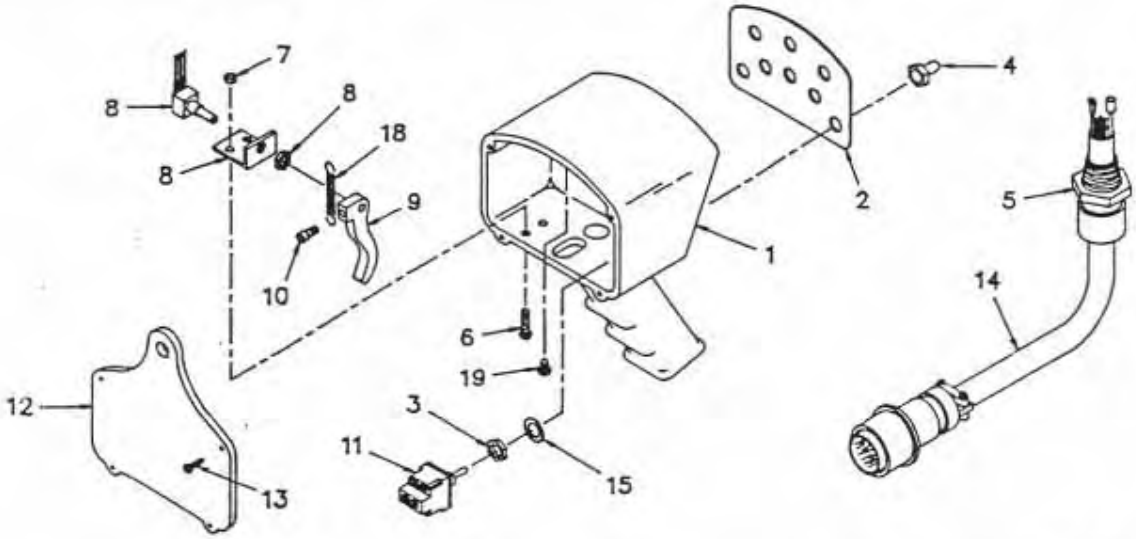

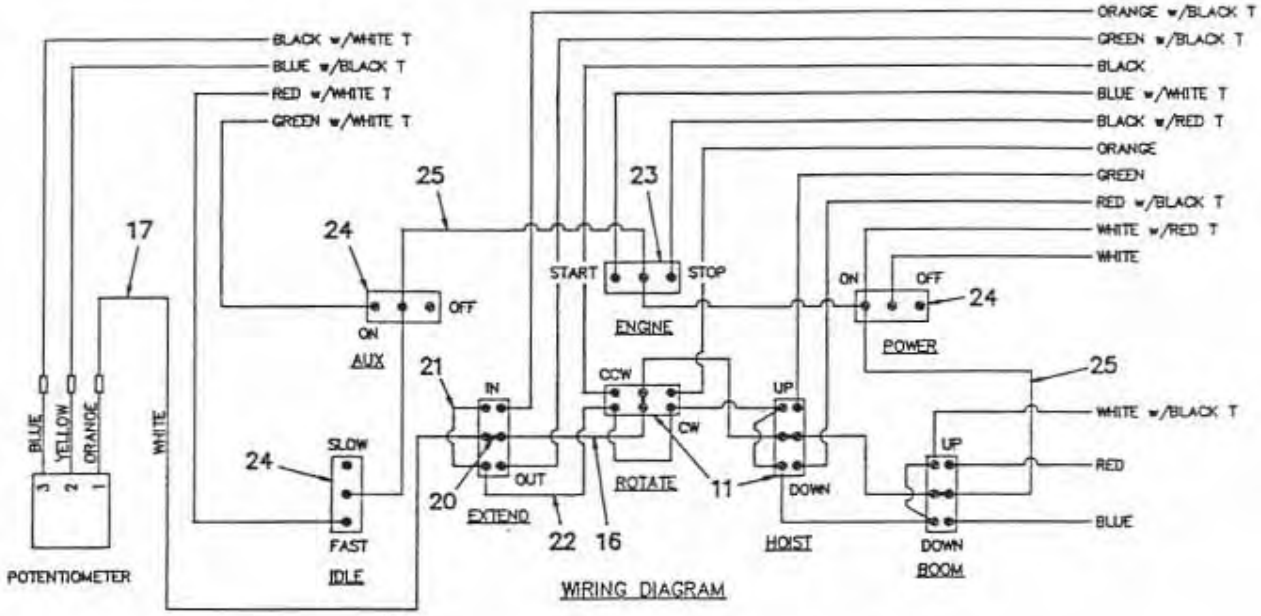

WIRING DIAGRAM

ITEM	QTY.	PART NO.	DESCRIPTION
1	1	480501	PENDANT HOUSING
2	1	480518	DECAL, COVER PLATE
3	8	REF.*	NUT
4	8	640300	BOOT, TOGGLE SWITCH
5	1	370433	CONNECTOR, HUBBEL F3
6	2	002607	SCREW, #10-24NC x 3/4
7	2	015801	NUT, HX. LK. #10-24NC
8	1	480507	POTENTIOMETER ASSEMBLY
9	1	480506	TRIGGER
10	1	480517	SCREW, SOC. HD. #10-32NF x 5/8
11	4	634200	SWITCH, TOGGLE DPDT
12	1	480504	BACK PLATE
13	4	480516	SCREW, S.T. RD. HD. #6 x 3/4
14	1	480589	CABLE ASSEMBLY
15	8	REF.*	WASHER, LOCK
16	3	660302	CONDUCTOR ASSEMBLY
17	1	480524	CONDUCTOR ASSEMBLY
18	1	480523	SPRING, TRIGGER RETURN
19	1	005003	SCREW, PAN HD. S.T. #6 x 3/8
20	4	636600	JUMPER
21	4	622346	CONDUCTOR ASSEMBLY 2 1/8"
22	3	622347	CONDUCTOR ASSEMBLY 3 1/8"
23	1	622000	SWITCH, TOGGLE SPDT
24	3	750090	SWITCH, TOGGLE ON/OFF
25	1	480526	CONDUCTOR ASSEMBLY
26	2	750737	TIE, CABLE

* COMES WITH ITEM 11

AW-480593
PROPORTIONAL PENDANT ASSEMBLY
EIGHT (8) FUNCTION

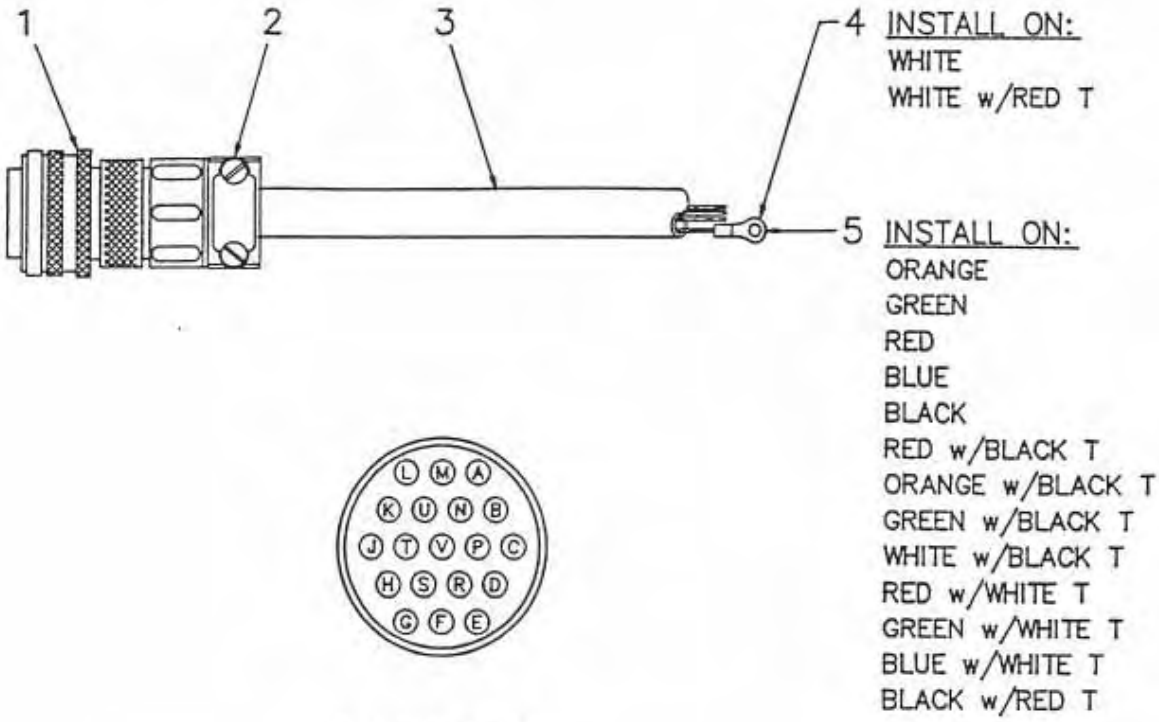

WIRING GUIDE

A–RED	L–WHITE
B–GREEN	M–BLUE W/BLACK T
C–ORANGE	N–BLACK W/WHITE T
D–RED W/WHITE T	P–GREEN W/WHITE T
E–BLACK	R–BLUE W/WHITE T
F–RED W/BLACK T	S–BLACK W/RED T
G–BLUE	T–WHITE W/RED T
H–ORANGE W/BLACK T	U–ORANGE W/RED T
J–GREEN W/BLACK T	V–BLUE W/RED T
K–WHITE W/BLACK T	

ITEM	QTY	P/N	DESCRIPTION
1	1	480514	PLUG, CONNECTOR
2	1	480515	CLAMP, CABLE
3	30'	480594–001	CABLE, CONDUCTOR (19 COND.)
4	2	000101	TERMINAL, RING #6 / 14–16 Ga
5	13	002012	TERMINAL, RING #6 / 18–22 Ga

AW–480588
PENDANT CABLE ASSEMBLY

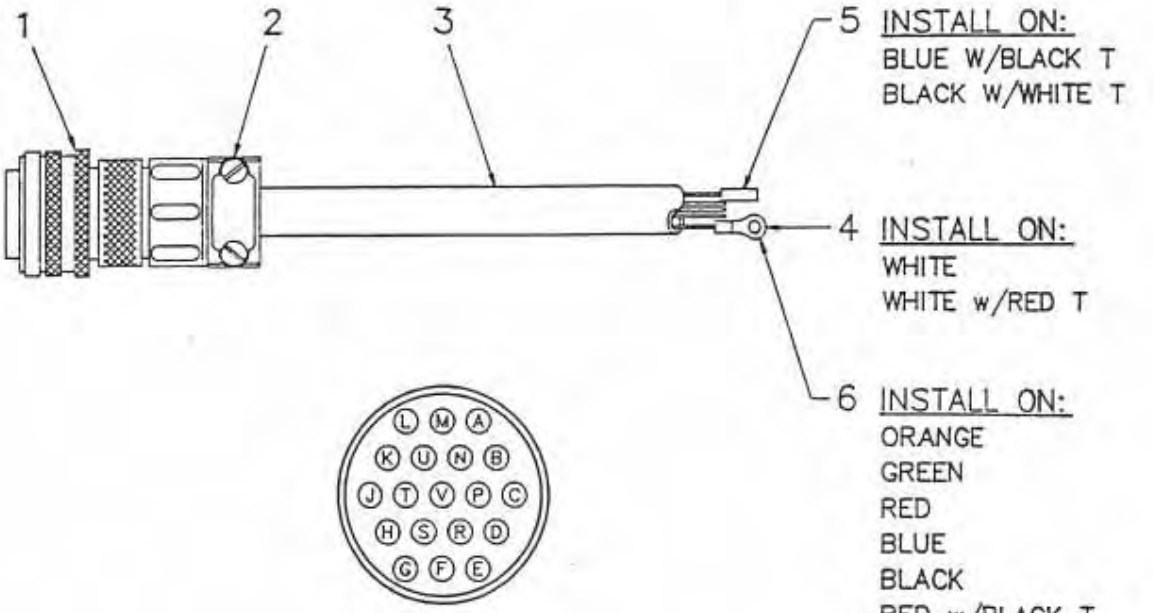

WIRING GUIDE

A–RED
B–GREEN
C–ORANGE
D–RED W/WHITE T
E–BLACK
F–RED W/BLACK T
G–BLUE
H–ORANGE W/BLACK T
J–GREEN W/BLACK T
K–WHITE W/BLACK T
L–WHITE
M–BLUE W/BLACK T
N–BLACK W/WHITE T
P–GREEN W/WHITE T
R–BLUE W/WHITE T
S–BLACK W/RED T
T–WHITE W/RED T
U–ORANGE W/RED T
V–BLUE W/RED T

ITEM	QTY	P/N	DESCRIPTION
1	1	480514	PLUG, CONNECTOR
2	1	480515	CLAMP, CABLE
3	30'	480594–001	CABLE, CONDUCTOR (19 COND.)
4	2	000101	TERMINAL, RING #6 / 14–16 Ga
5	2	480510	BULLET CONNECTOR, FEMALE
6	13	002012	TERMINAL, RING #6 / 18–22 Ga

AW–480589
PENDANT CABLE ASSEMBLY

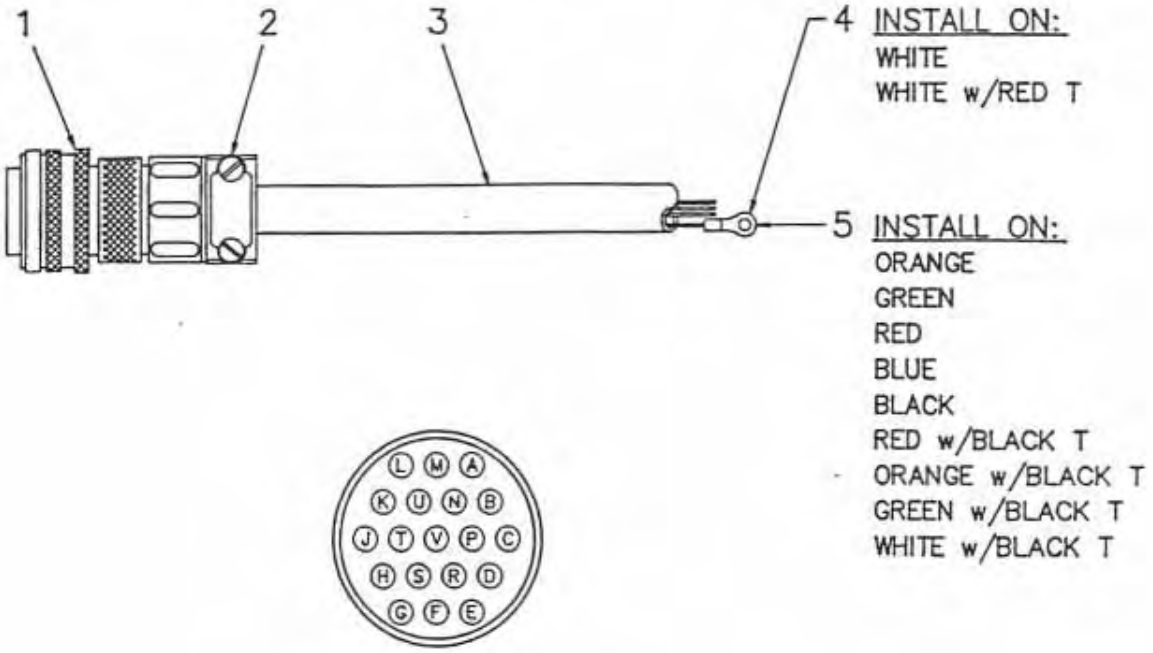

WIRING GUIDE

A–RED	L–WHITE
B–GREEN	M–BLUE W/BLACK T
C–ORANGE	N–BLACK W/WHITE T
D–RED W/WHITE T	P–GREEN W/WHITE T
E–BLACK	R–BLUE W/WHITE T
F–RED W/BLACK T	S–BLACK W/RED T
G–BLUE	T–WHITE W/RED T
H–ORANGE W/BLACK T	U–ORANGE W/RED T
J–GREEN W/BLACK T	V–BLUE W/RED T
K–WHITE W/BLACK T	

ITEM	QTY	P/N	DESCRIPTION
1	1	480514	PLUG, CONNECTOR
2	1	480515	CLAMP, CABLE
3	30'	480594–001	CABLE, CONDUCTOR (19 COND.)
4	2	000101	TERMINAL, RING #6 / 14–16 Ga
5	9	002012	TERMINAL, RING #6 / 18–22 Ga

AW–480595
PENDANT CABLE ASSEMBLY

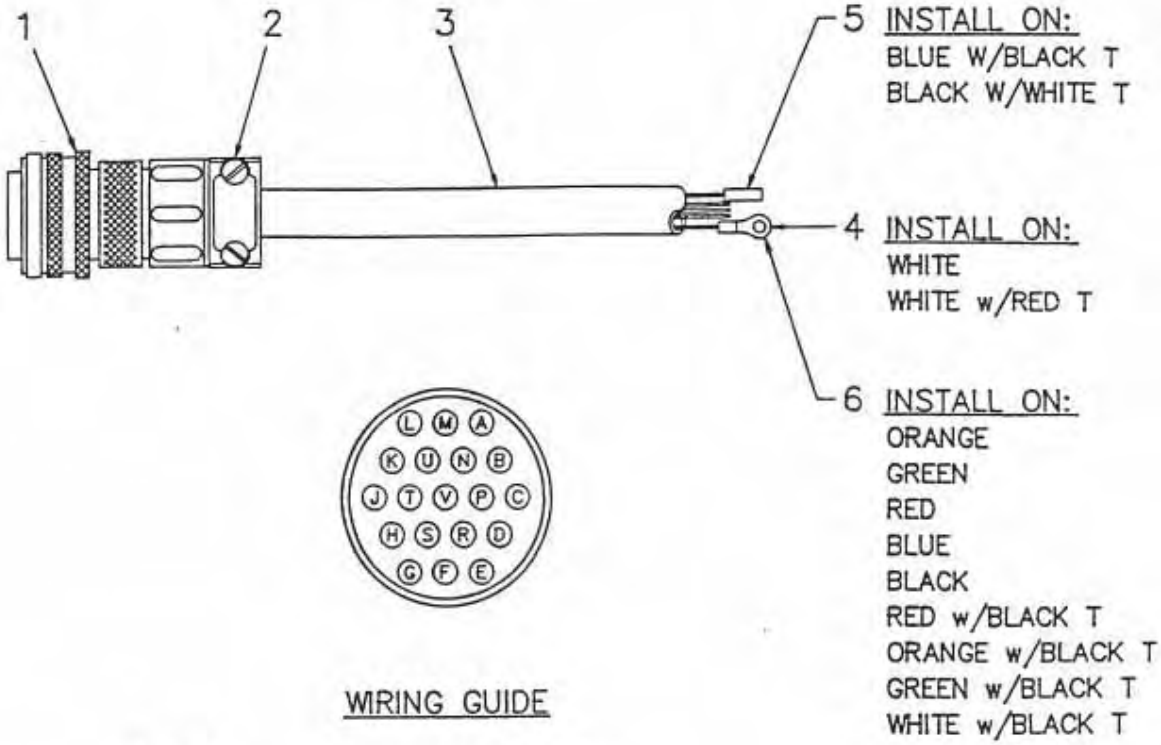

WIRING GUIDE

A–RED
B–GREEN
C–ORANGE
D–RED W/WHITE T
E–BLACK
F–RED W/BLACK T
G–BLUE
H–ORANGE W/BLACK T
J–GREEN W/BLACK T
K–WHITE W/BLACK T
L–WHITE
M–BLUE W/BLACK T
N–BLACK W/WHITE T
P–GREEN W/WHITE T
R–BLUE W/WHITE T
S–BLACK W/RED T
T–WHITE W/RED T
U–ORANGE W/RED T
V–BLUE W/RED T

ITEM	QTY	P/N	DESCRIPTION
1	1	480514	PLUG, CONNECTOR
2	1	480515	CLAMP, CABLE
3	30'	480594–001	CABLE, CONDUCTOR (19 COND.)
4	2	000101	TERMINAL, RING #6 / 14–16 Ga
5	2	480510	BULLET CONNECTOR, FEMALE
6	9	002012	TERMINAL, RING #6 / 18–22 Ga

AW–480596
PENDANT CABLE ASSEMBLY

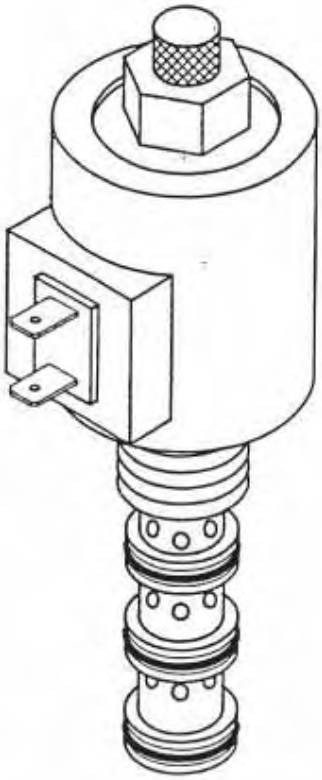

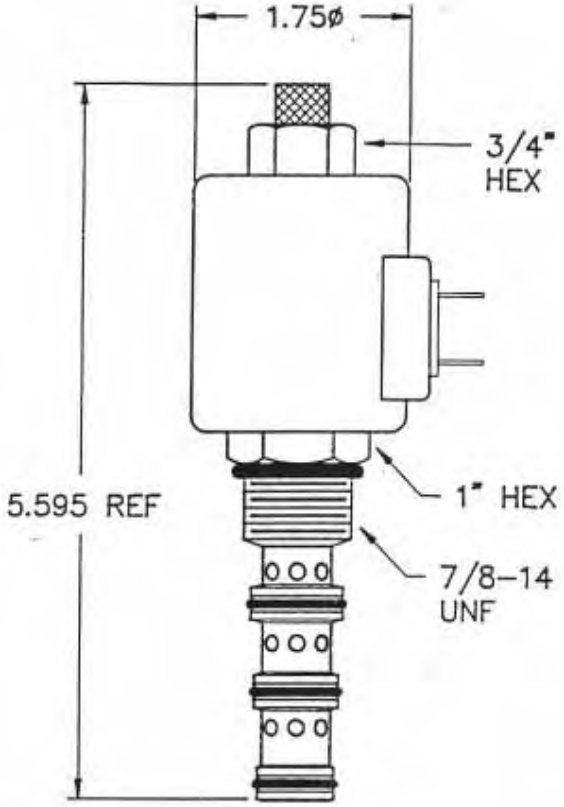

NOTES:

1.) FOR SEAL KIT, ORDER PART NO. 480184-002

2.) FOR REPLACEMENT COIL, ORDER PART NO. 480184-003

AW-480184
CARTRIDGE VALVE

NOTES

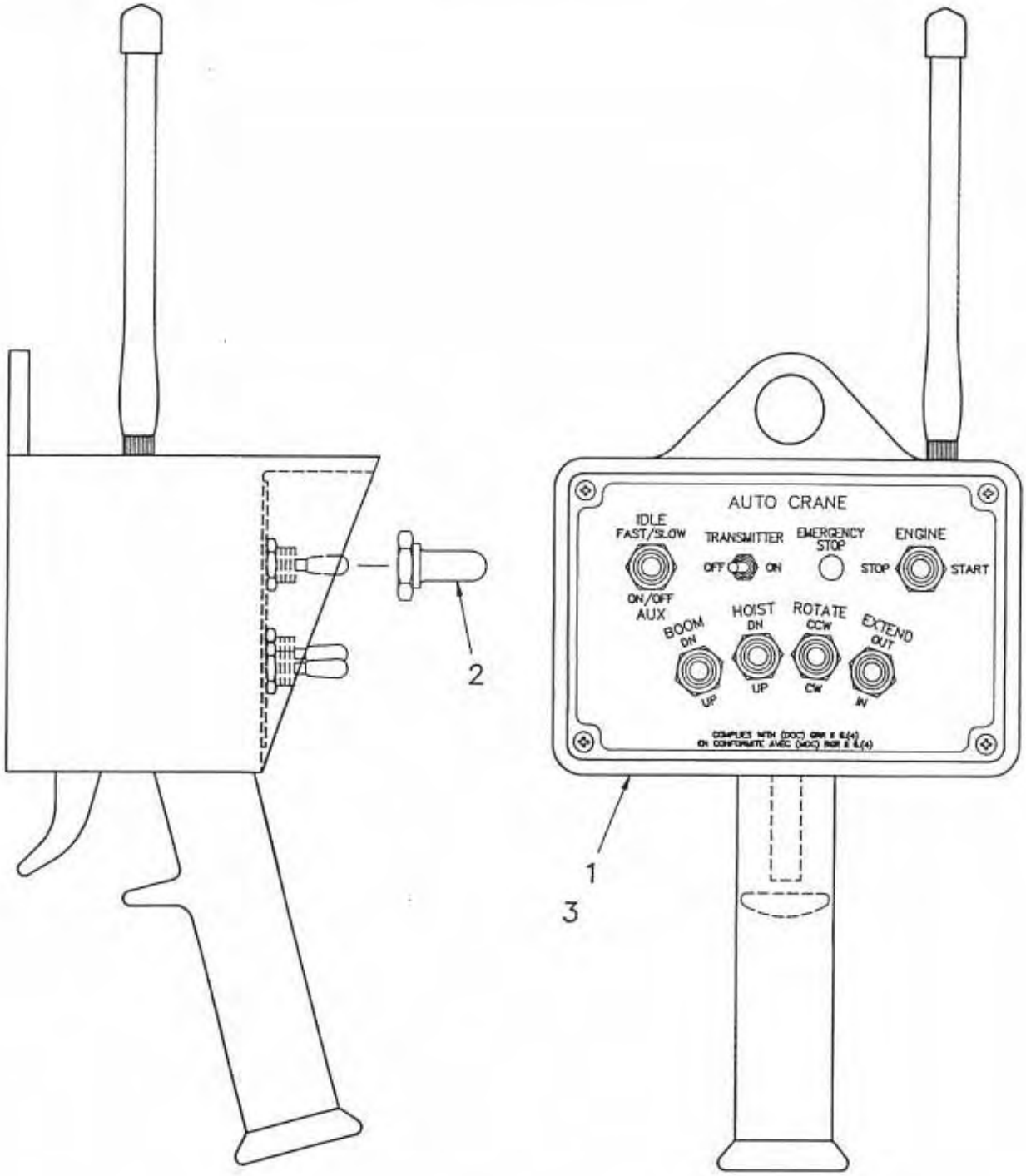

ITEM	QTY	P/N	DESCRIPTION
1	1	480621–002	FM REMOTE TRANSMITTER (TOGGLE)
2	6	640300	BOOT, TOGGLE
3	1	480605	BATTERY, 9V

AW–480623
FM REMOTE TRANSMITTER
TOGGLE SWITCH

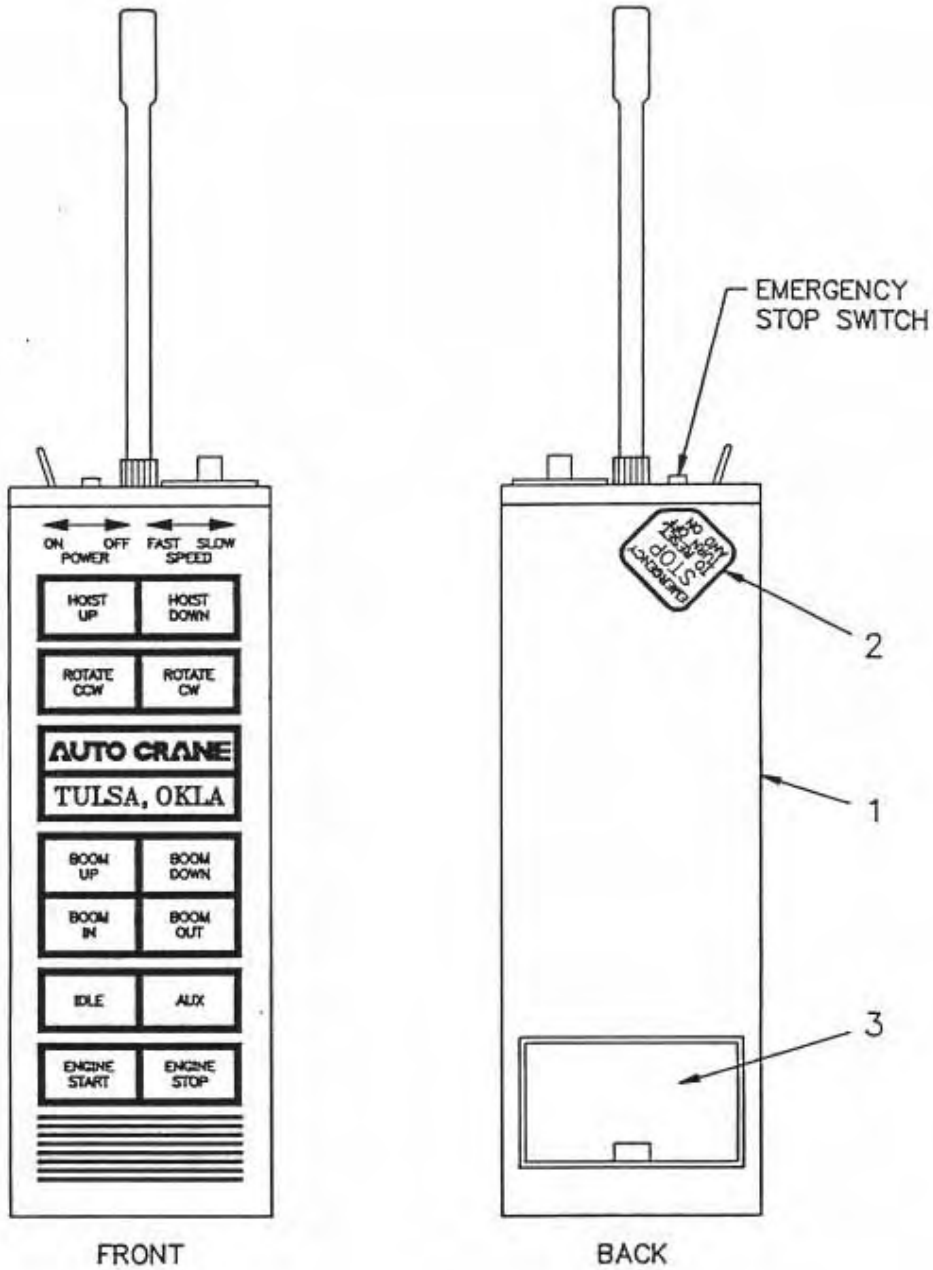

ITEM	QTY	P/N	DESCRIPTION
1	1	480622-001	FM REMOTE TRANSMITTER (MEMBRANE)
2	1	480632	DECAL, EMERGENCY STOP
3	1	480605	BATTERY, 9V

AW-480633
FM REMOTE TRANSMITTER
MEMBRANE SWITCH

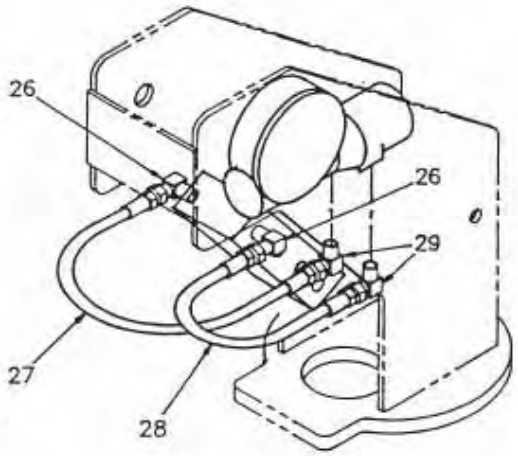

HOIST
(TOP SPOOL)

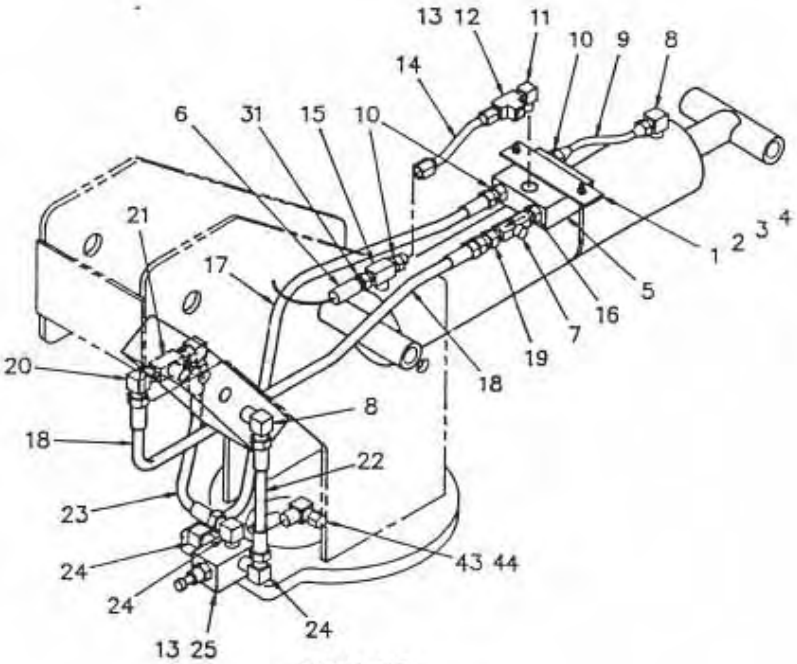

BOOM UP
(3rd SPOOL FROM TOP)

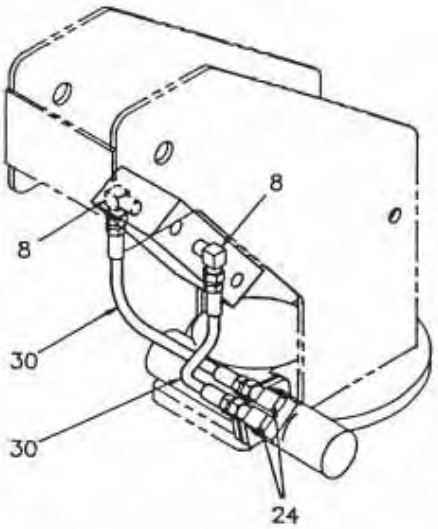

ROTATION
(2nd SPOOL FROM TOP)

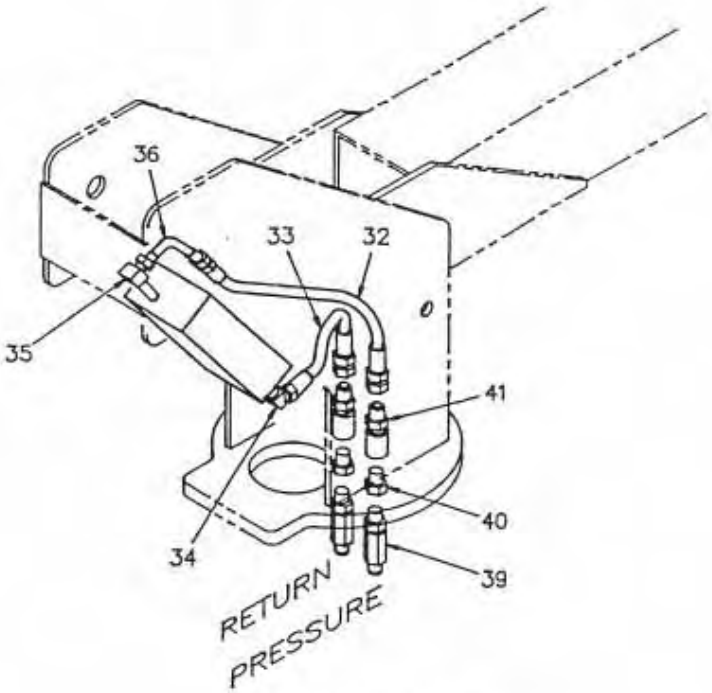

PRESSURE & RETURN

AW–360564
HYDRAULIC ASSEMBLY, 5005H
MANUAL EXTENSION

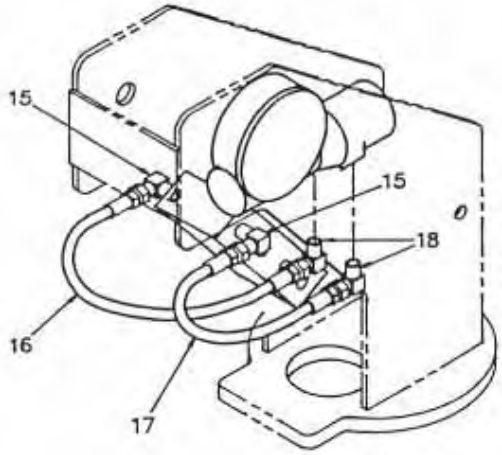

HOIST
(TOP SPOOL)

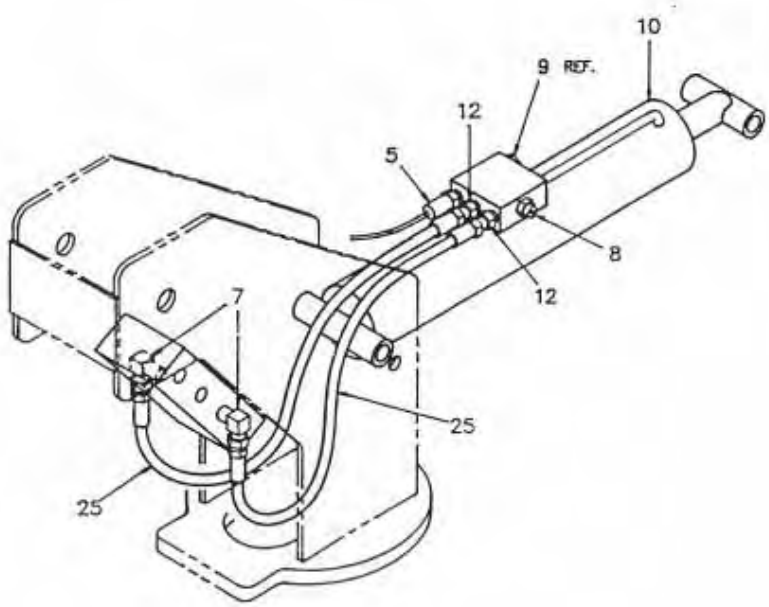

BOOM UP
(3rd SPOOL FROM TOP)

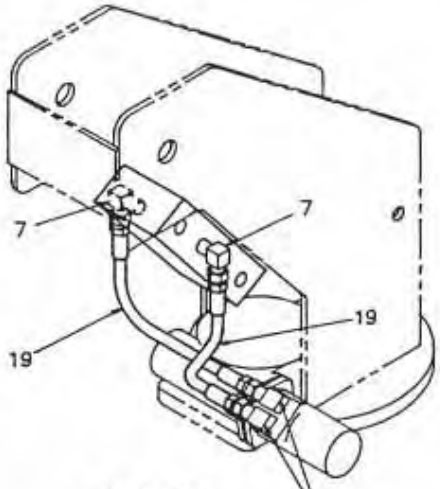

ROTATION
(2nd SPOOL FROM TOP)

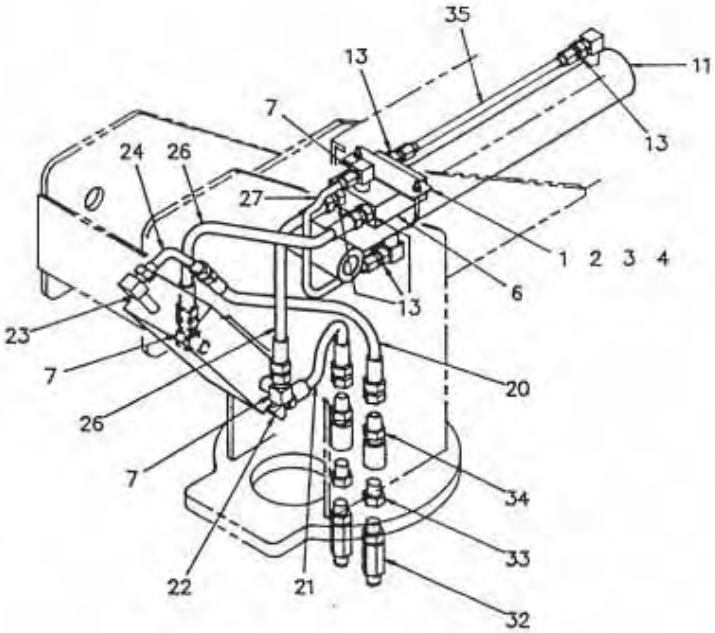

PRESSURE RETURN
EXTENSION
(BOTTOM SPOOL)

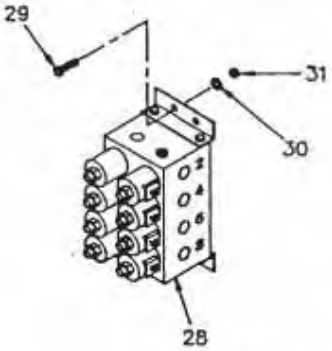

AW–360744
5005H HYDRAULIC ASSEMBLY
10–16 BOOM

AW-360744
5005H HYDRAULIC ASSEMBLY, 10-16 BOOM

ITEM	QTY.	PART NO.	DESCRIPTION
1	1	360091	U-BOLT
2	1	360092	CLAMP
3	2	020200	WASHER, SP LK 1/4
4	2	015900	NUT, HEX 1/4-20NC
5	1	320472	LOAD SENSOR SWITCH
6	1	360153	VALVE, COUNTERBALANCE
7	7	200892	ELL, 90° -6 NPT M/-6 JIC
8	1	360745	CARTRIDGE, COUNTERBALANCE VALVE
9	1	REF.	PLUG, -6 ORB
10	1	360805	CYLINDER, BOOM UP
11	1	360152	CYLINDER, EXTENSION
12	2	200876	ADAPTER, -6 ORB/-6 JIC
13	5	360042	ADAPTER, -6 NPT M/-6 JIC
14	2	202759	ELL, 90° -8 NPT M/-6 JIC
15	2	360044	ELL, 90° -6 NPT M/-8 JIC
16	1	480203	HOSE ASSEMBLY (24 3/4" - 1/2 I.D.)
17	1	480202	HOSE ASSEMBLY (21 1/2" - 1/2 I.D.)
18	2	360043	ELL, 90° -8 NPT M/-8 JIC
19	2	480204	HOSE ASSEMBLY (17 1/2" - 3/8 I.D.)
20	1	360578	HOSE ASSEMBLY (22 1/4" - 1/2 I.D.)
21	1	360579	HOSE ASSEMBLY (15 1/2" - 1/2 I.D.)
22	1	480191	ELL, 45° -6 NPT M/-8 JIC
23	1	480213	ELL, 90° -6 NPT M/-8 JIC LONG
24	1	480211	TUBE ASSEMBLY
25	2	480208	HOSE ASSEMBLY
26	2	360075	HOSE ASSEMBLY
27	1	360069	TUBE ASSEMBLY
28	1	360620	VALVE BANK ASSEMBLY
29	4	008701	SCREW, HEX HD 3/8-16NC x 1" LG.
30	4	021100	WASHER, SP LK 3/8
31	4	017100	NUT, HEX 3/8-16NC
32	2	750412	SWIVEL JOINT
33	2	750413	REDUCER, -8 NPT/-6 NPT
34	2	360054	ADAPTER, -8 NPT/-8 JIC
35	1	360070	TUBE ASSEMBLY

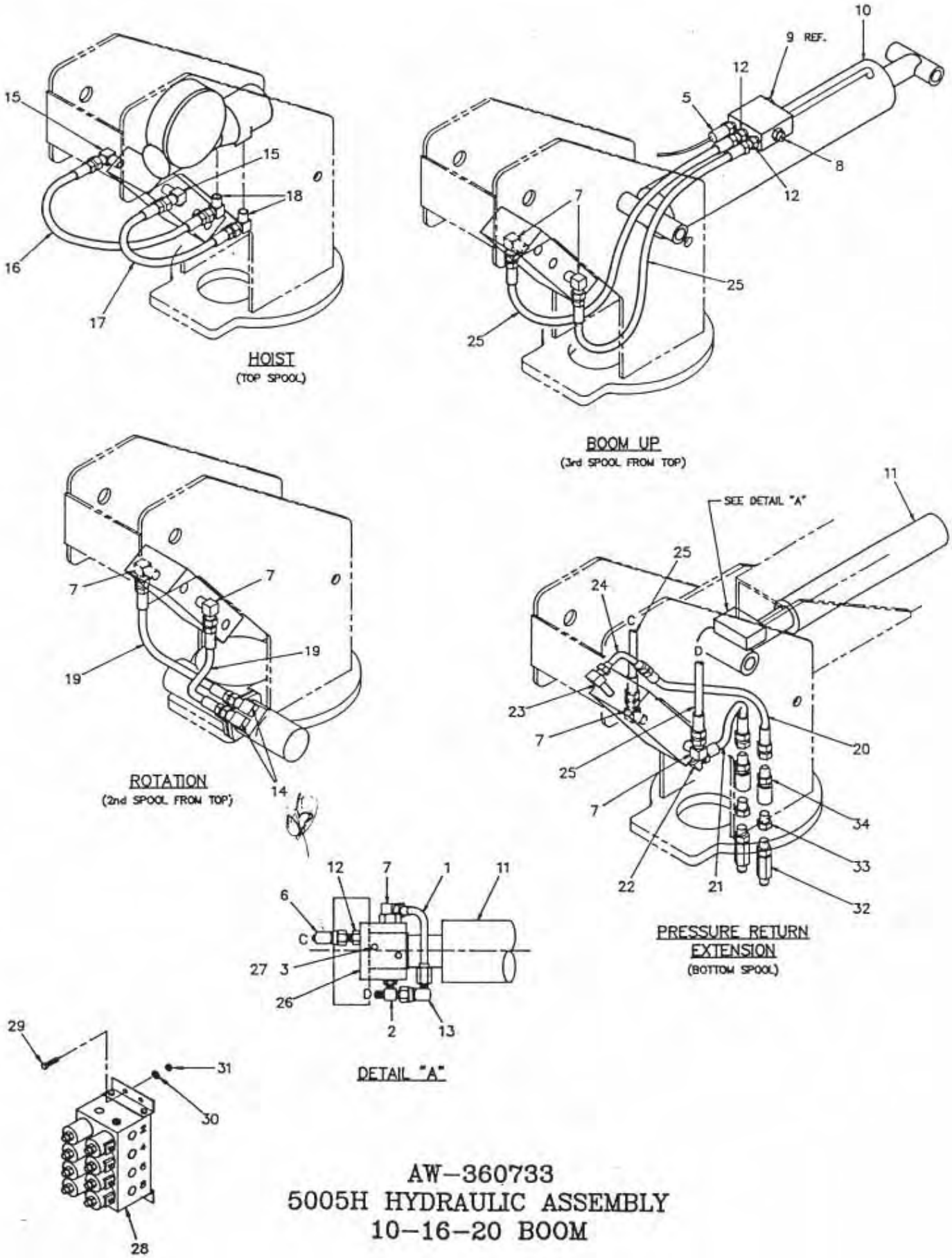

AW-360733
5005H HYDRAULIC ASSEMBLY
10-16-20 BOOM

AW-360733
5005H HYDRAULIC ASSEMBLY, 10-16-20 BOOM

ITEM	QTY.	PART NO.	DESCRIPTION
1	1	480212	TUBE ASSEMBLY (EXT. CYL.)
2	1	241168	TEE, -6 ORB/-6 JIC RUN
3	4	020200	WASHER, SP LK 1/4
4	—	—	—
5	1	320472	LOAD SENSOR SWITCH
6	1	330647	ELL, 45° SWIVEL -6 JIC
7	7	200892	ELL, 90° -6 NPT M/-6 JIC
8	1	360745	CARTRIDGE, COUNTERBALANCE VALVE
9	1	REF.	PLUG, -6 ORB
10	1	360805	CYLINDER, BOOM UP
11	1	366162	CYLINDER, EXTENSION
12	3	200876	ADAPTER, -6 ORB/-6 JIC
13	1	480194	ELL, 90° SWIVEL -6 JIC
14	2	202759	ELL, 90° -8 NPT M/-6 JIC
15	2	360044	ELL, 90° -6 NPT M/-8 JIC
16	1	480203	HOSE ASSEMBLY (24 3/4" - 1/2 I.D.)
17	1	480202	HOSE ASSEMBLY (21 1/2" - 1/2 I.D.)
18	2	360043	ELL, 90° -8 NPT M/-8 JIC
19	2	480204	HOSE ASSEMBLY (17 1/2" - 3/8 I.D.)
20	1	360578	HOSE ASSEMBLY (22 1/4" - 1/2 I.D.)
21	1	360579	HOSE ASSEMBLY (15 1/2" - 1/2 I.D.)
22	1	480191	ELL, 45° -6 NPT M/-8 JIC
23	1	480213	ELL, 90° -6 NPT M/-8 JIC LONG
24	1	480211	TUBE ASSEMBLY
25	4	480208	HOSE ASSEMBLY
26	1	330412	VALVE, COUNTERBALANCE
27	2	005810	SCREW, HEX HD 1/4-20NC x 1 3/4
28	1	360620	VALVE BANK ASSEMBLY
29	4	008701	SCREW, HEX HD 3/8-16NC x 1" LG.
30	4	021100	WASHER, SP LK 3/8
31	4	017100	NUT, HEX 3/8-16NC
32	2	750412	SWIVEL JOINT
33	2	750413	REDUCER, -8 NPT/-6 NPT
34	2	360054	ADAPTER, -8 NPT/-8 JIC

NOTES

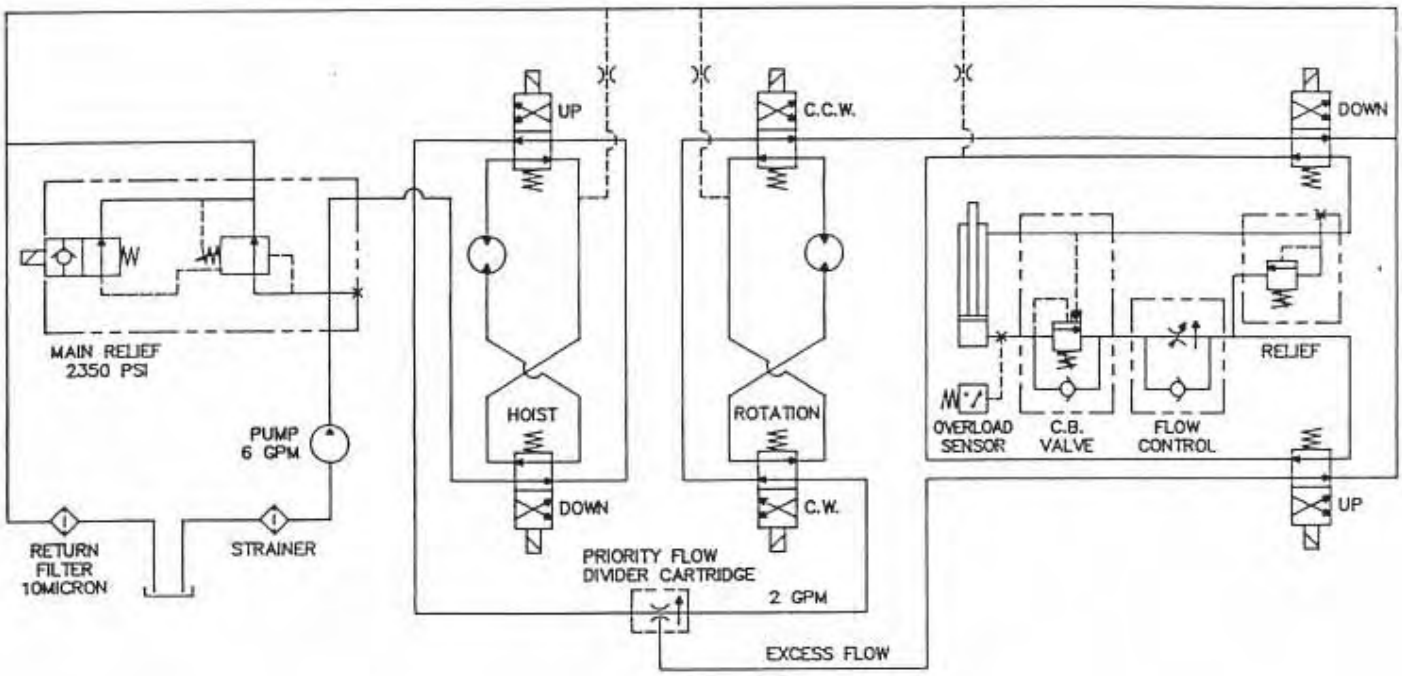

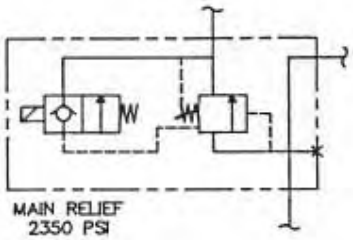

RELIEF VALVE SHOWN
WITH SOLENOID ENERGIZED

AW–360653
HYDRAULIC SCHEMATIC, 5005H
MANUAL EXTENSION

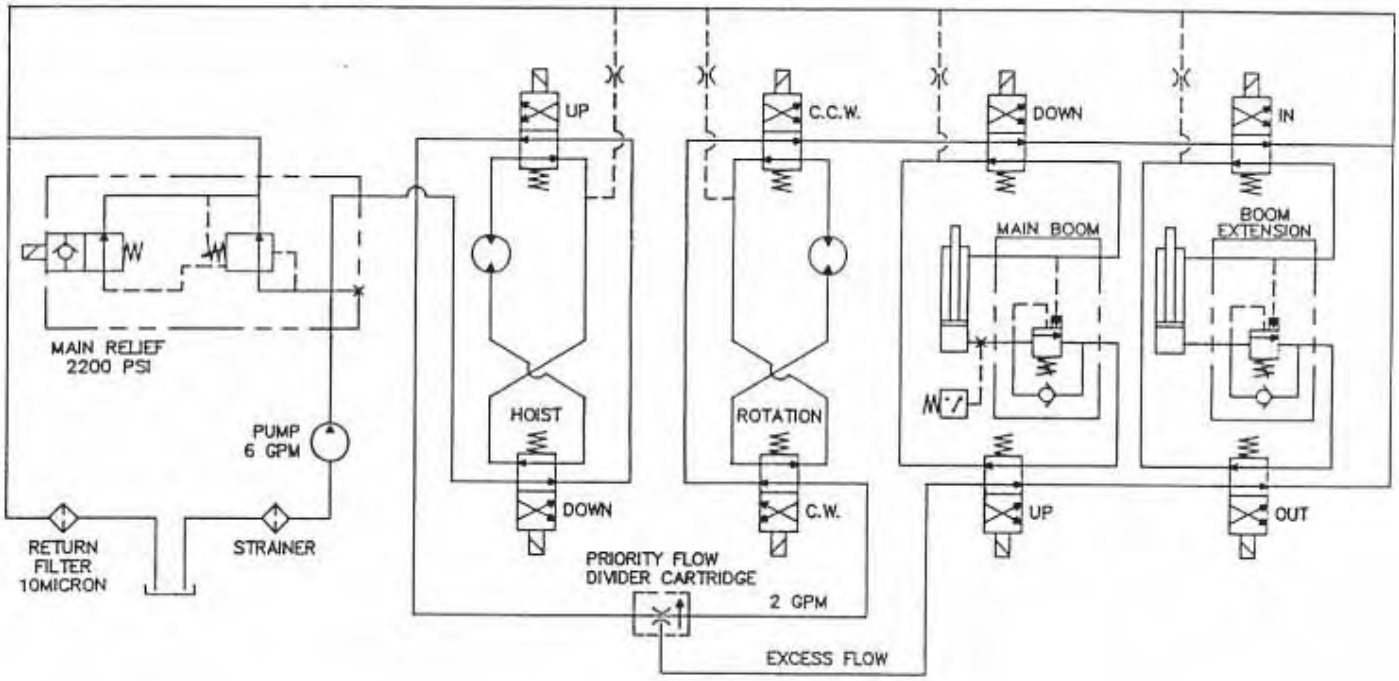

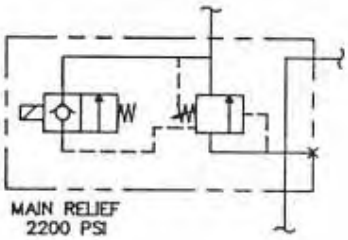

RELIEF VALVE SHOWN
WITH SOLENOID ENERGIZED

AW–360654
HYDRAULIC SCHEMATIC, 5005H

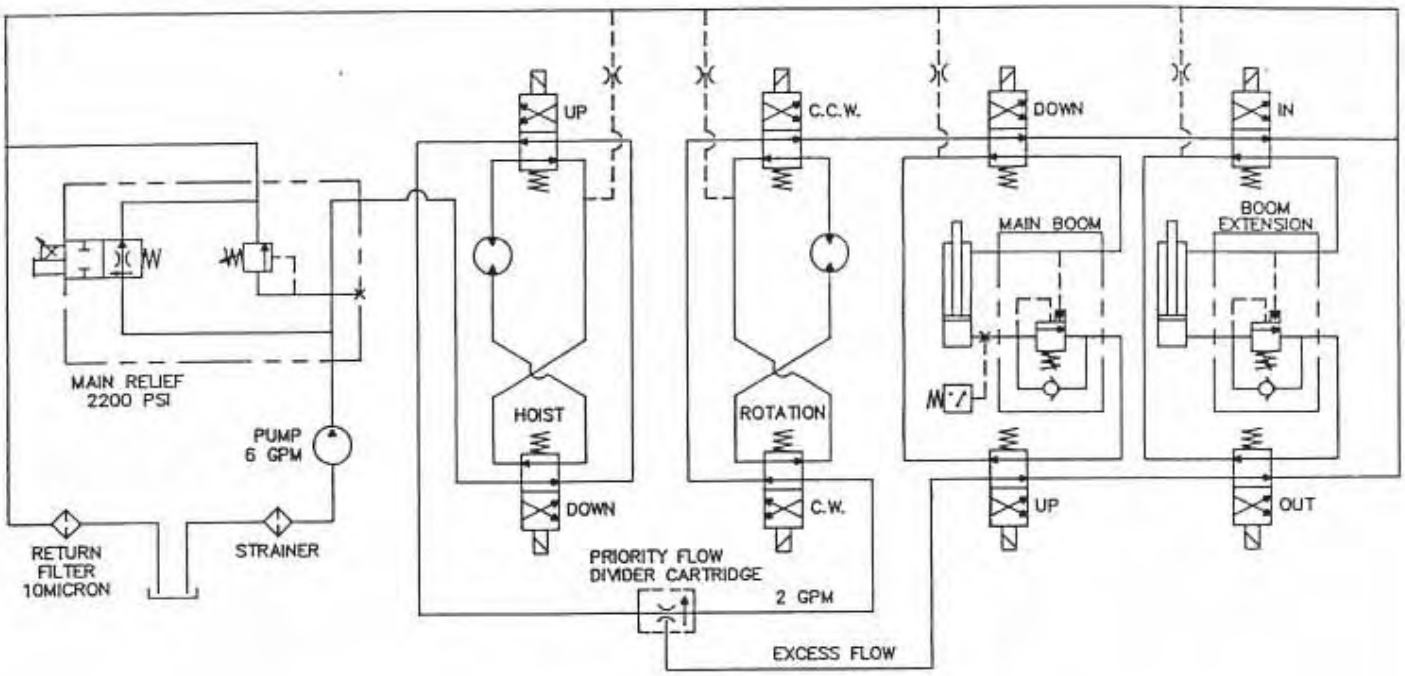

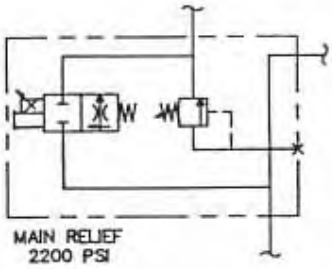

RELIEF VALVE SHOWN
WITH SOLENOID ENERGIZED

AW-360655
HYDRAULIC SCHEMATIC, 5005H
PROPORTIONAL

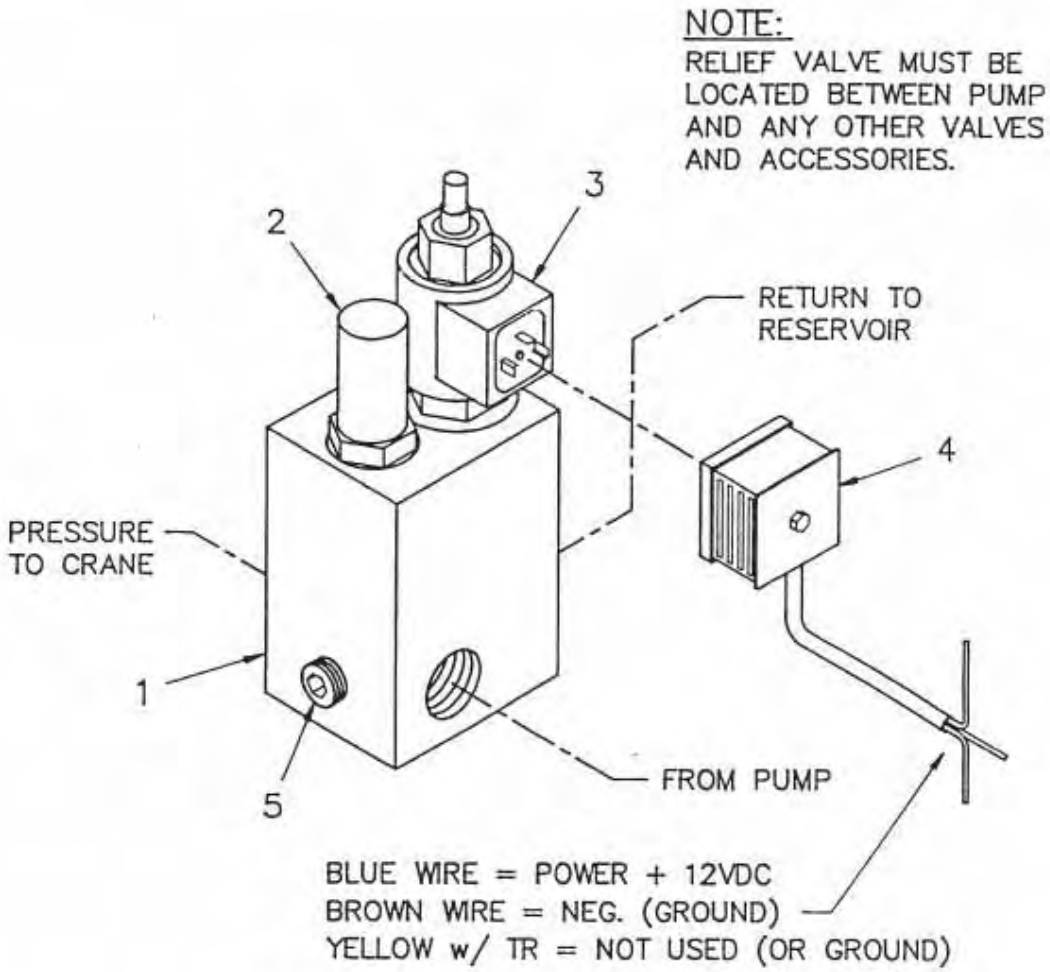

ITEM	QTY	P/N	DESCRIPTION
1	1	480136	VALVE, VENTED RELIEF 2350 PSI
2		480136-001	REPLACEMENT CARTRIDGE
3	1	480137	VALVE, DIRECTIONAL SOLENOID
4	1	480613	DIN CONNECTOR
5	1	000209	PLUG, PIPE - SOC. 1/4"

AW-360247
VENTED RELIEF VALVE
ASSEMBLY w/ SOLENOID (2350 PSI)

NOTE:
RELIEF VALVE MUST BE LOCATED BETWEEN PUMP AND ANY OTHER VALVES AND ACCESSORIES.

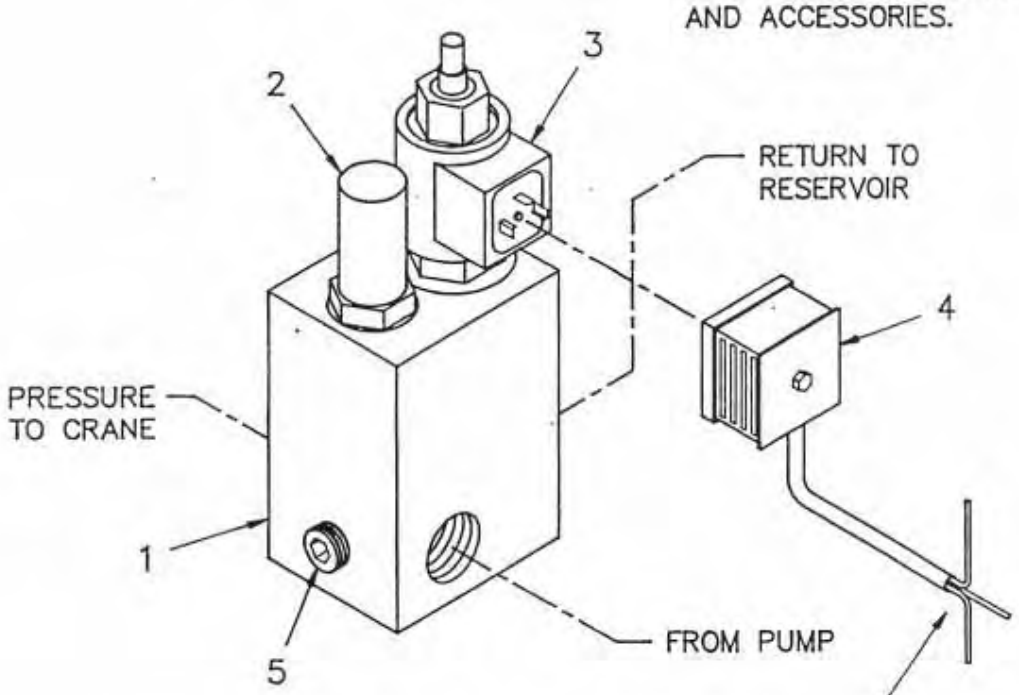

BLUE WIRE = POWER + 12VDC
BROWN WIRE = NEG. (GROUND)
YELLOW w/ TR = NOT USED (OR GROUND)

ITEM	QTY	P/N	DESCRIPTION
1	1	366211	VALVE, VENTED RELIEF 2200 PSI
2		366211-001	REPLACEMENT CARTRIDGE
3	1	480137	VALVE, DIRECTIONAL SOLENOID
4	1	480613	DIN CONNECTOR
5	1	000209	PLUG, PIPE - SOC. 1/4"

AW-366212
VENTED RELIEF VALVE
ASSEMBLY w/ SOLENOID (2200 PSI)

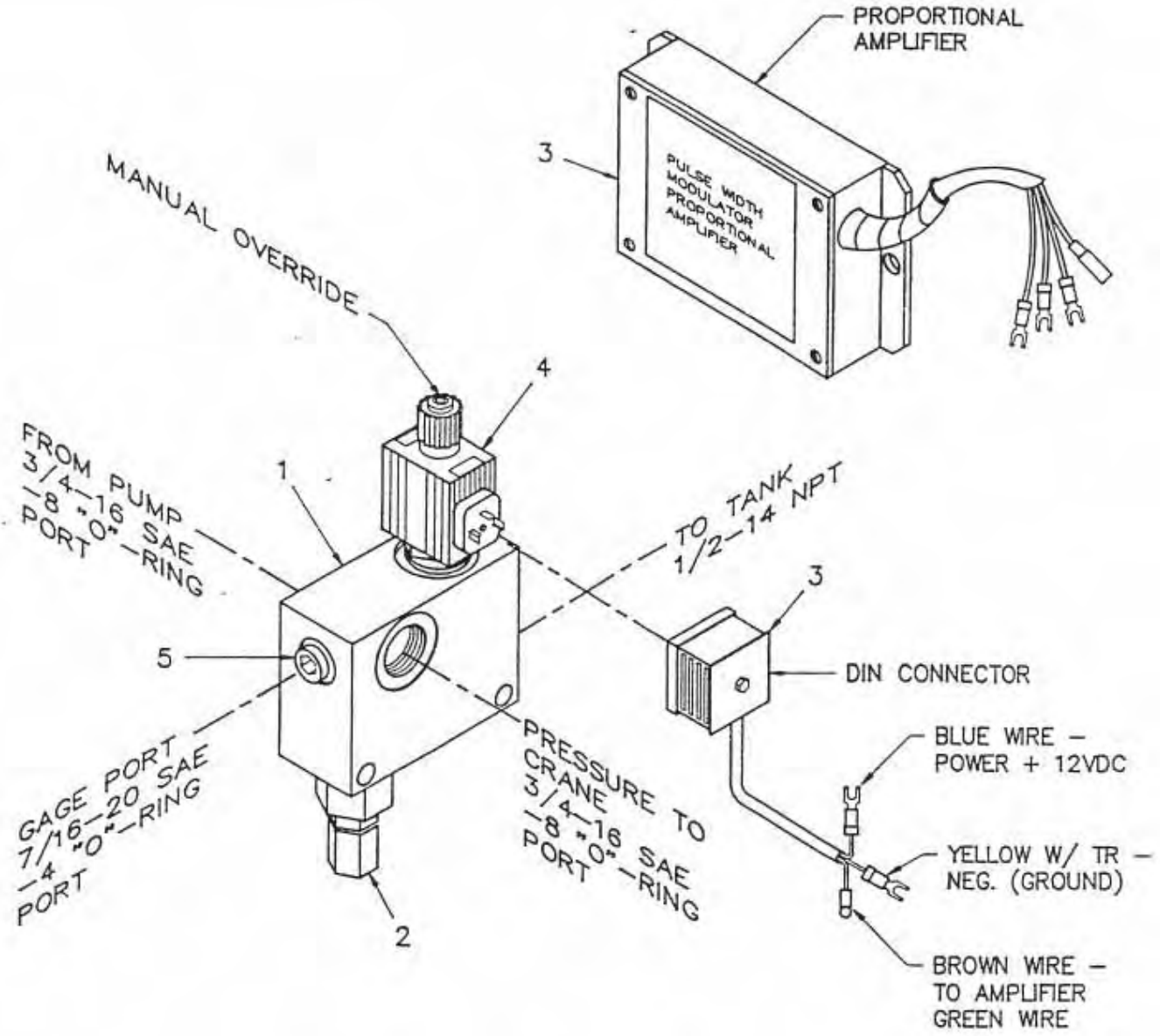

ITEM	QTY	P/N	DESCRIPTION
1	1	480521	MANIFOLD, BLOCK
2	1	360157-002	VALVE, RELIEF
3	1	480522	AMPLIFIER, PROP. (IN SHIP KIT)
4	1	480520	VALVE, SOLENOID
5	1	000211	PLUG, -4 SAE "O"-RING

AW-480525
HYDRAULIC MANIFOLD ASSEMBLY
PROPORTIONAL

FIXTURE NO.	FINISH NO.

CHG LTR	REVISIONS DESCRIPTION	DATE	APP'D

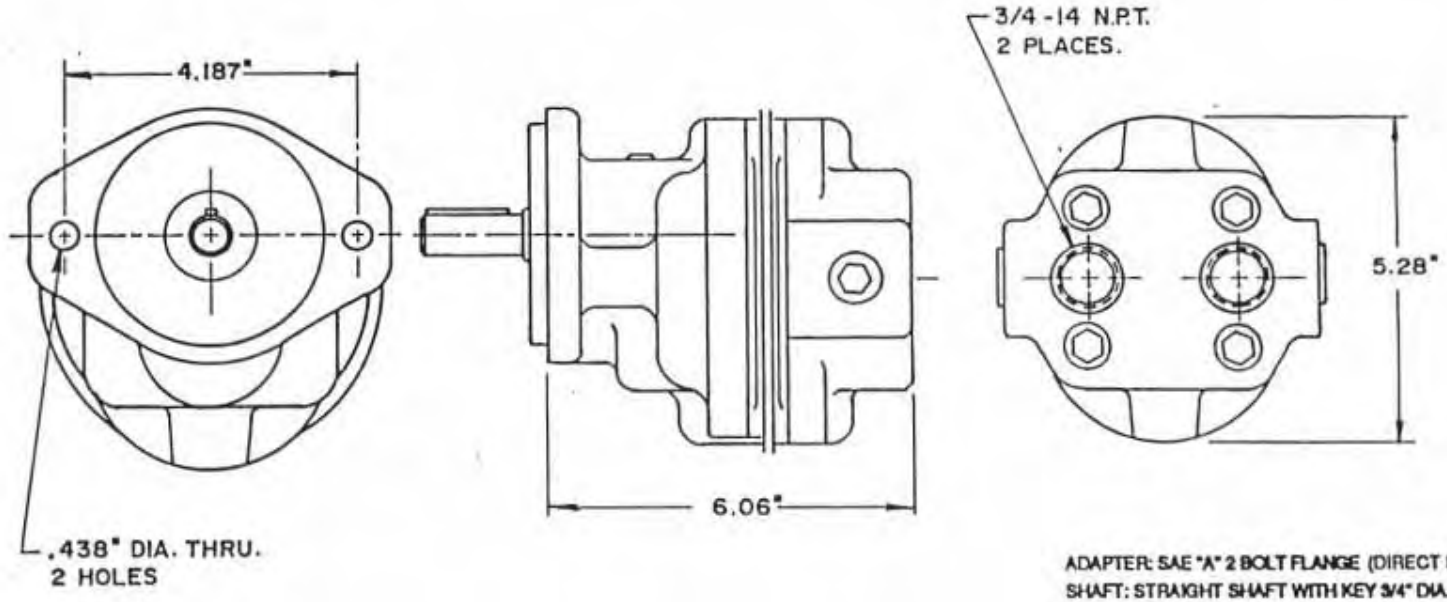

ADAPTER: SAE "A" 2 BOLT FLANGE (DIRECT MOUNT ONLY).
SHAFT: STRAIGHT SHAFT WITH KEY 3/4" DIA. 2-3/4" LONG
3/16" SQ. KEY 1-5/8" LONG

NOTE:
PUMP SPEED - 950 R.P.M. (STANDARD)

NOTES:
1. TO ORDER HYD. PUMP ASSEMBLY USE PART NO. 360030, WHICH CONSISTS OF HYD. PUMP (360029), 3/4-14NPT/1-5/16-12 JIC ADAPTER (360055) SUCTION AND 3/4-14 NPT/ 1 1/16-12 JIC (750399) PRESSURE
2. FOR SEAL KIT USE PART NO. 480018-001.
3. FOR SERVICE KIT USE PART NO. 480018-002.

QUANTITY	ITEM	D/S	PART NO.	DESCRIPTION
				LIST OF MATERIAL

UNLESS OTHERWISE NOTED ALL DIMENSIONS ARE IN INCHES.
TOLERANCES UNLESS OTHERWISE SPECIFIED
ANGLES ± 1/2° | .XX ± .40
FRACTIONAL ± 1/16 | .XXX ± .010
REMOVE ALL BURRS AND SHARP EDGES. DO NOT SCALE THIS DRAWING.
TOLERANCES NOT SHOWN ABOVE ARE PER ANSI Y14.5 - 1973

THIS PRINT IS THE PROPERTY OF AUTO CRANE CO AND MUST NOT BE USED IN ANY MANNER DETRIMENTAL TO THEIR INTERESTS

DRAWN BY Armstrong
DATE 2-16-83
CHK'D BY
DATE
ENG. BY
DATE

AUTO CRANE COMPANY

TITLE
PUMP, HYDRAULIC - DIRECT MOUNT

SCALE	SIZE	DRAWING NO	REVISION
~	B	AW-360029	~

WEIGHT
SHEET 1 OF 1

12/86 NEXT ASS'Y

RIDGWAYS 1000H

6-8.0.0

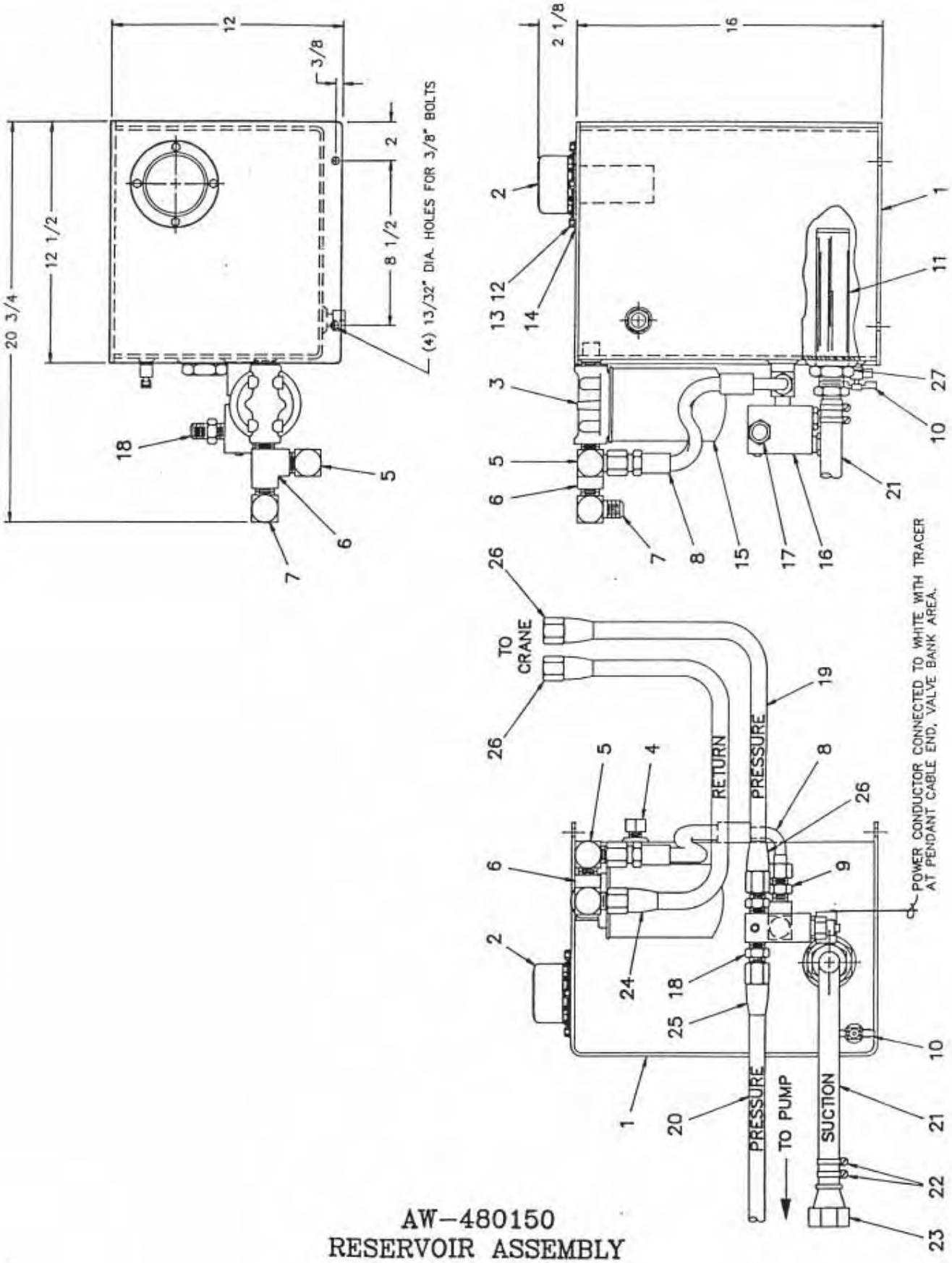

AW–480150
RESERVOIR ASSEMBLY
8 GALLON

AW-480150
RESERVOIR ASSEMBLY, 8 GALLON

ITEM	QTY.	PART NO.	DESCRIPTION
1	1	480151	RESERVOIR, WELDMENT
2	1	360151	FILLER ASSEMBLY
3	1	360156	FILTER ASSEMBLY
4	1	360150	SIGHT PLUG
5	1	551222	ELL
6	1	360262	TEE
7	1	360263	ELL
8	1	360284	HOSE ASSEMBLY
9	1	360054	ADAPTER, STRAIGHT
10	1	750715	DRAIN
11	1	360282	STRAINER, SUCTION LINE
12	4	005500	SCREW, HEX HD 1/4-20NC x 3/4
13	4	020200	WASHER, SP LK 1/4
14	1	360249	COVER, CLEAN OUT
15	1	360277	FILTER, SPIN ON (FOR REPLACEMENT)
16	1	REF.	VENTED RELIEF VALVE ASSEMBLY
17	1	REF.	ADAPTER, STRAIGHT (360054)
18	1	REF.	ADAPTER, STRAIGHT (551215)
19	1	REF.	HOSE, -8 (551228-001)
20	1	REF.	HOSE, -12 (360274-001)
21	1	REF.	HOSE, -16 (360275-001)
22	4	REF.	HOSE CLAMP, -16 (360268)
23	1	REF.	HOSE ADAPTER (360273)
24	1	REF.	FITTING, REUSABLE -10/-8 (551227)
25	2	REF.	FITTING, REUSABLE -10/-12 (360269)
26	3	REF.	FITTING, REUSABLE -8/-8 (360266)
27	1	REF.	ADAPTER, STRAIGHT (360270)

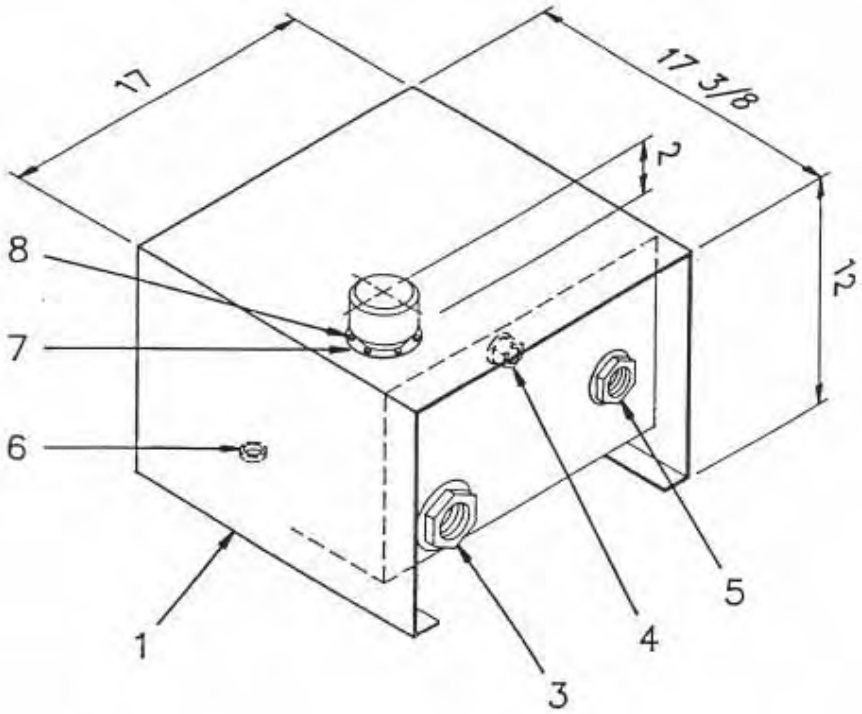

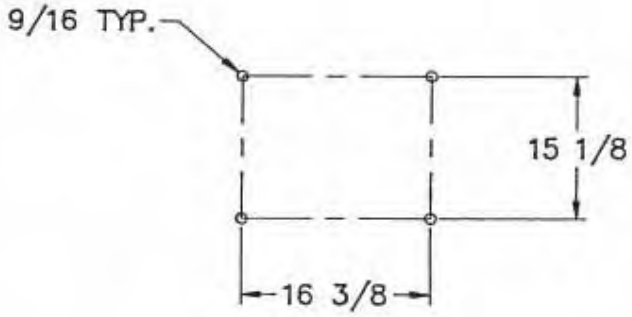

MOUNTING PATTERN

ITEM	QTY	P/N	DESCRIPTION	ITEM	QTY	P/N	DESCRIPTION
1	1	750501	RESERVOIR WELDMENT	6	1	750477	PLUG, PIPE –8
2	1	360151	FILLER ASSEMBLY	7	1	360249	COVER, CLEAN OUT
3	1	360282	STRAINER, SUCTION	8	4	005500	SCW, HX HD 1/4NC x 3/4
4	1	360150	SIGHT GLASS	9	4	020200	WASHER, SP LK 1/4
5	1	750708	STRAINER, DIFFUSER				

AW–750500
9 GALLON RESERVOIR

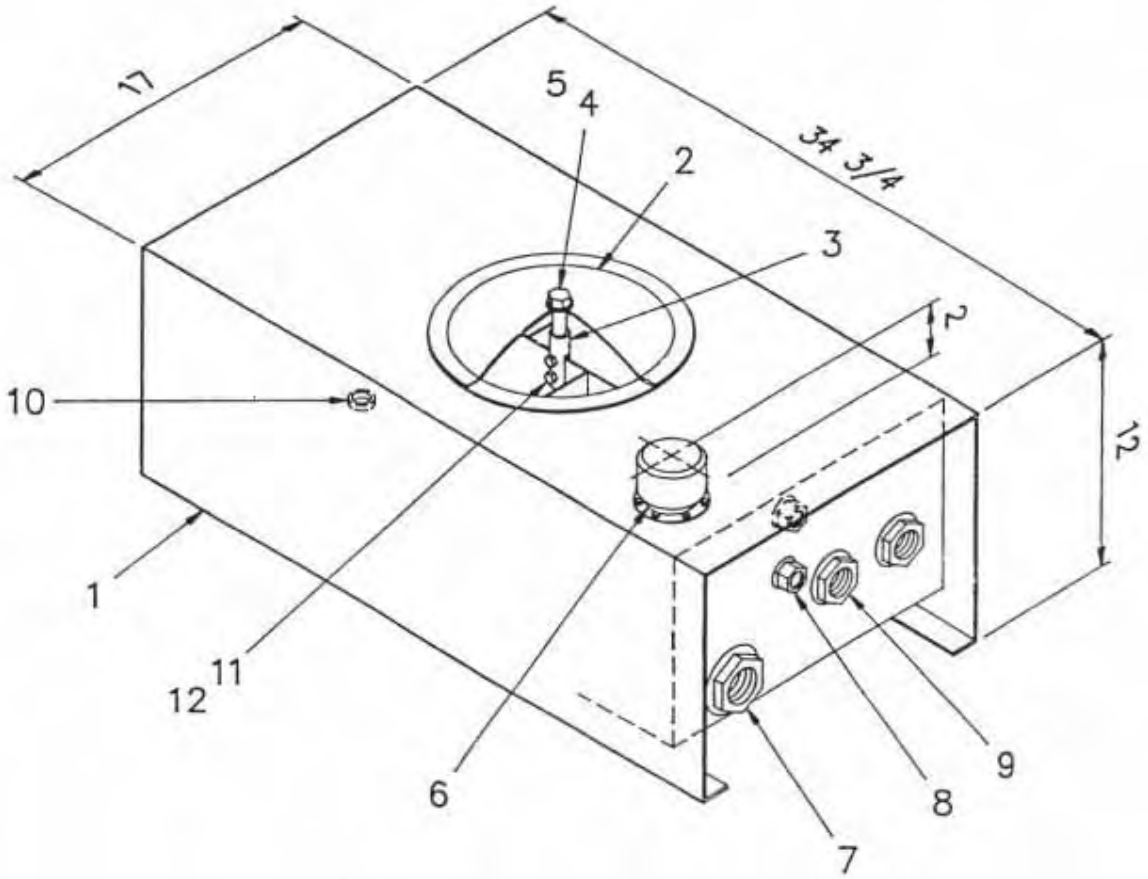

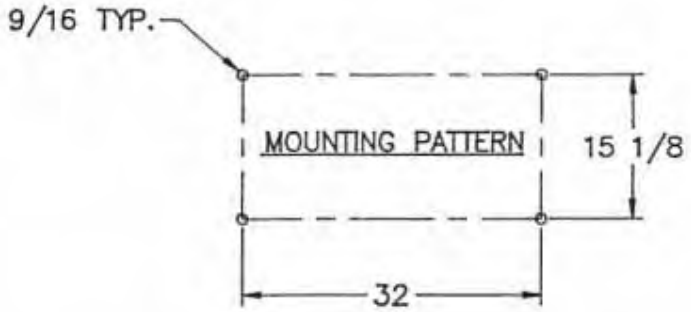

ITEM	QTY	P/N	DESCRIPTION	ITEM	QTY	P/N	DESCRIPTION
1	1	750691	RESERVOIR WELDMENT	7	1	750707	STRAINER, SUCTION
2	1	750712	COVER	8	2	360150	SIGHT PLUG
3	1	750709	ADAPTER, BAFFLE	9	2	750708	STRAINER, DIFFUSER
4	1	750716	WASHER, CRUSH	10	1	750477	PLUG, PIPE -8
5	1	750711	BOLT, END COVER	11	2	009108	SCW, HX HD 3/8NC x 1 1/4
6	1	360151	FILLER ASSEMBLY	12	2	017400	NUT, HX LK 3/8NC

AW-750690
18 GALLON RESERVOIR

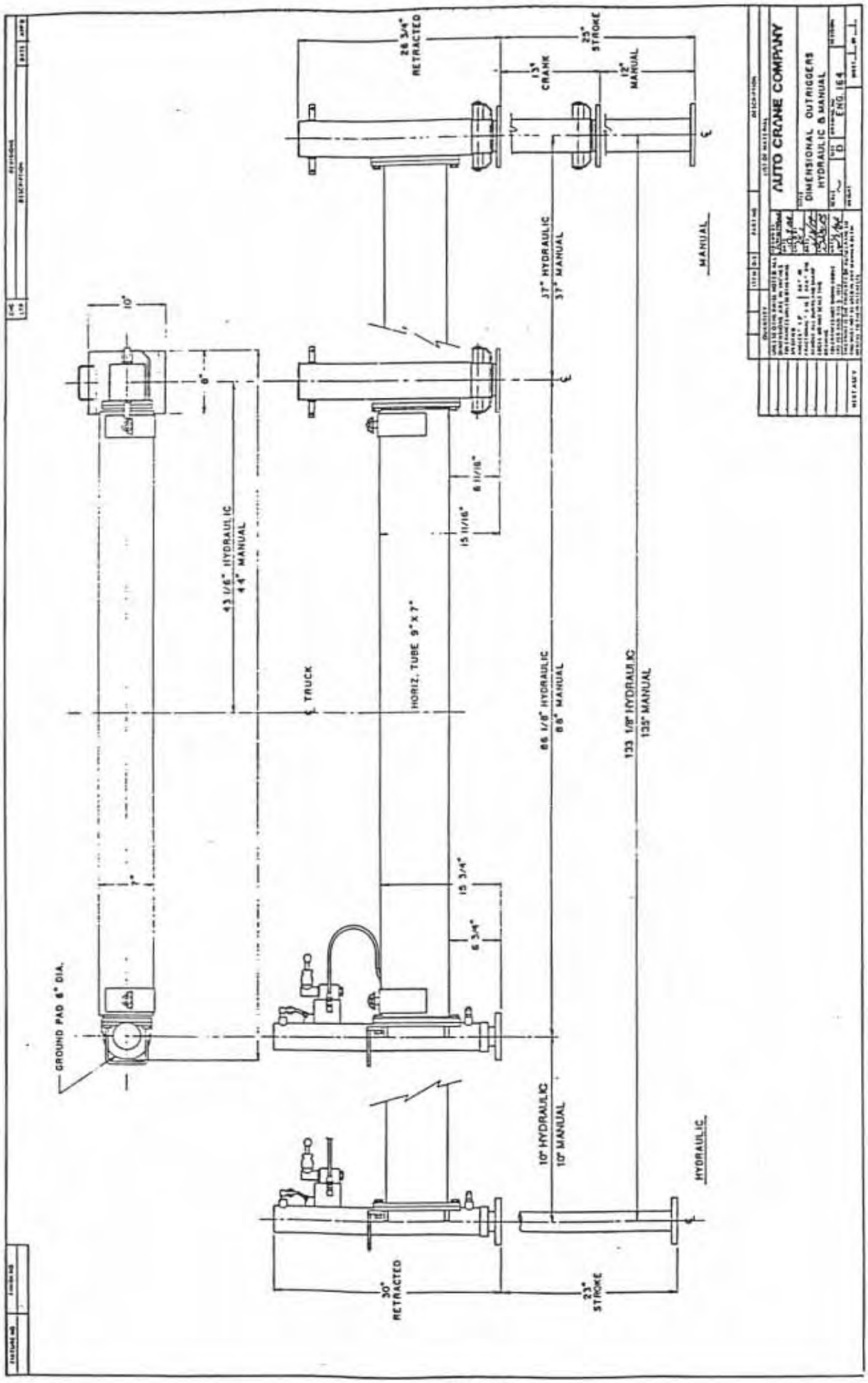
28 3/4" RETRACTED
23" STROKE
13" CRANK
12" MANUAL
37" HYDRAULIC
37" MANUAL
MANUAL
10"
8"
43 1/8" HYDRAULIC
44" MANUAL
6 11/16"
15 11/16"
HORIZ. TUBE 9" X 7"
TRUCK
86 1/8" HYDRAULIC
88" MANUAL
133 1/8" HYDRAULIC
135" MANUAL
15 3/4"
6 3/4"
GROUND PAD 6" DIA.
10" HYDRAULIC
10" MANUAL
HYDRAULIC
30" RETRACTED
23" STROKE
AUTO CRANE COMPANY
DIMENSIONAL OUTRIGGERS
HYDRAULIC & MANUAL
ENG. 164

NOTES

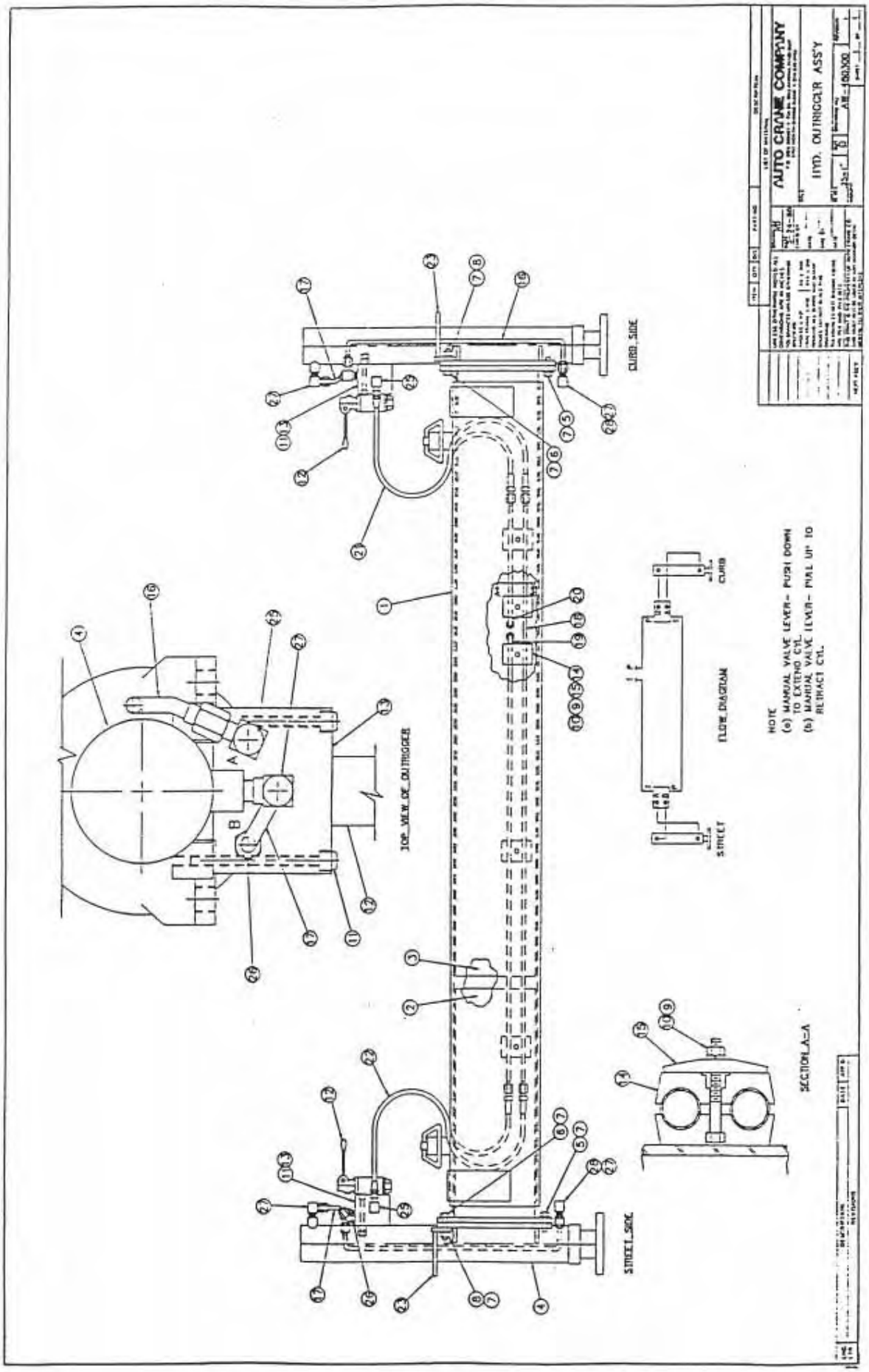
AUTO CRANE COMPANY
HYD. OUTRIGGER ASS'Y
CURB SIDE
STREET SIDE
TOP VIEW OF OUTRIGGER
FLOW DIAGRAM
CURB
STREET
SECTION A-A
NOTE
(a) MANUAL VALVE LEVER- PUSH DOWN TO EXTEND CYL.
(b) MANUAL VALVE LEVER- PULL UP TO RETRACT CYL.

HYD. OUTRIGGER ASS'Y, AW-480300

ITEM	QTY.	PART NO.	DESCRIPTION
1	1	759035	MAIN CROSS TUBE
2	1	750893	SLIDE, STREET SIDE
3	1	750894	SLIDE, CURB SIDE
4	2	480017	CYLINDER, VERTICAL
5	4	012203	SCREW, HX. HD. 5/8 - NF X 1 1/4
6	8	013506	SCREW, HX. HD. 5/8 - NF X 2 1/4
7	8	023800	WASHER, SP. LK. 5/8
8	4	018302	NUT, HX. 5/8 - NF
9	5	016500	NUT, HX. 5/16 - NC
10	5	020600	WASHER, SP. LK. 5/16
11	4	003906	SCREW SOC. HD. 5/16 - 18 NC X 3 1/4
12	2	480230	VALVE MANUAL, OUTRIGGER (VERTICAL)
13	2	480231	MANIFOLD, OUTRIGGER
14	5	480232	CLAMP, HALVES
15	5	480233	PLATE, TWIN COVER
16	2	480220	TUBE ASS'Y (LEG)
17	2	480221	TUBE ASS'Y (LEG)
18	1	480222	TUBE ASS'Y
19	1	480223	TUBE ASS'Y
20	1	480224	TUBE ASS'Y
21	2	480225	HOSE ASS'Y O.R. (CURB SIDE)
22	2	480226	HOSE ASS'Y O.R. (STREET SIDE)
23	2	480227	HANDLE ASS'Y
24	1	480235	KIT, OUTRIGGER INSTALLATION
25	6	241175	ELL, 90°, -6 ORB/ -6 JIC
26	2	480195	ELL, 45°, -6 ORB/ -6 JIC
27	4	200892	ELL, 90°, 3/8 NP/ -6 JIC
28	2	360048	ELL, 90°, -6 NPT/ -6 NPTF
29	1	480014	SEAL KIT (FOR CYL. 480017)

FIXTURE NO.	FINISH NO.

CHG LTR	REVISIONS DESCRIPTION	DATE	APP'D

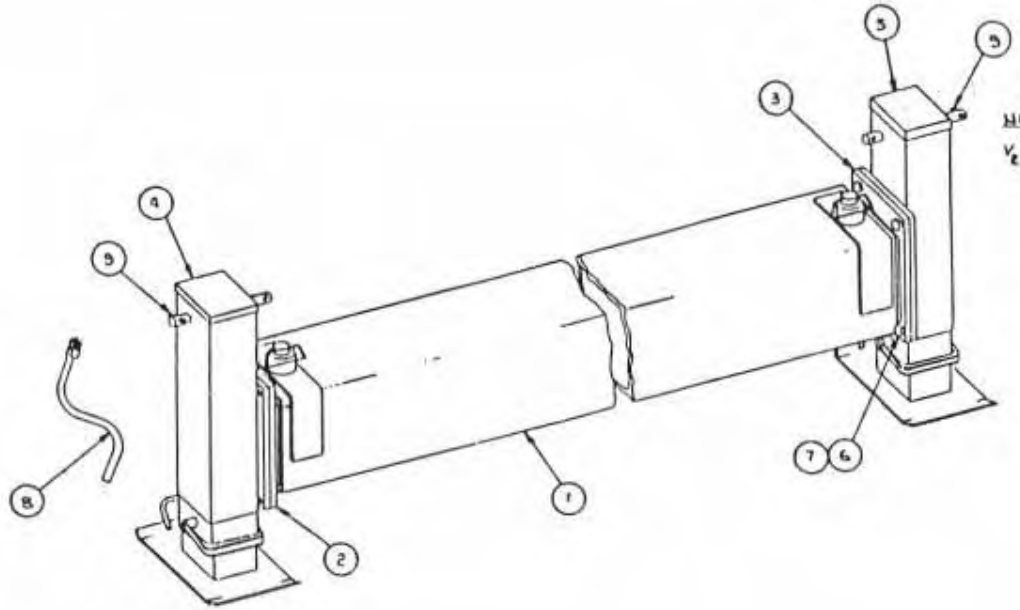

NOTE:
INSTALL ITEM 9 (PIN) WITH
1/8 INCH EACH SIDE OF CRANK SHAFT.

QUANTITY			ITEM	D/S	PART NO.	DESCRIPTION
2			9	A	480162	PIN, ROLL 3/8 x 2" LG.
1			8	A	480164	HANDLE CRANK
8			7	A	023800	WASHER, SP LK 5/8
8			6	A	012203	SCREW HX HD 5/8 NF x 1 1/2" LG
1			5	B	480165	OUTRIGGER, MANUAL WELDMENT (R)
1			4	B	480168	OUTRIGGER, MANUAL WELDMENT (L)
1			3	B	750894	SLIDE, CURB SIDE
1			2	B	750893	SLIDE, STREET SIDE
1			1	B	750891	MAIN CROSS TUBE ASS'Y

LIST OF MATERIAL

NEXT ASS'Y

UNLESS OTHERWISE NOTED ALL DIMENSIONS ARE IN INCHES. TOLERANCES UNLESS OTHERWISE SPECIFIED
ANGLES ± 1/2° | XX ± .1
FRACTIONAL ± 1/16 | XXX ± .010
REMOVE ALL BURRS AND SHARP EDGES. DO NOT SCALE THIS DRAWING.
TOLERANCES NOT SHOWN ABOVE ARE PER ANSI Y14.5 1973

THIS PRINT IS THE PROPERTY OF AUTO CRANE CO AND MUST NOT BE USED IN ANY MANNER DETRIMENTAL TO THEIR INTERESTS.

DRAWN BY KICKMAN
DATE 5-5-84
CHK'D BY
DATE
ENG BY
DATE

AUTO CRANE COMPANY
P.O. BOX 55548 • TULSA, OKLAHOMA 74145
9260 BROKEN ARROW EXPRESSWAY • 918 627 9475

TITLE
OUTRIGGER ASSEMBLY (MANUAL)

SCALE	SIZE	DRAWING NO	REVISION
-	C	AW-480301	-

WEIGHT

SHEET 1 OF 1

FIXTURE NO.	FINISH NO.

CHG LTR	REVISIONS DESCRIPTION	DATE	APP'D

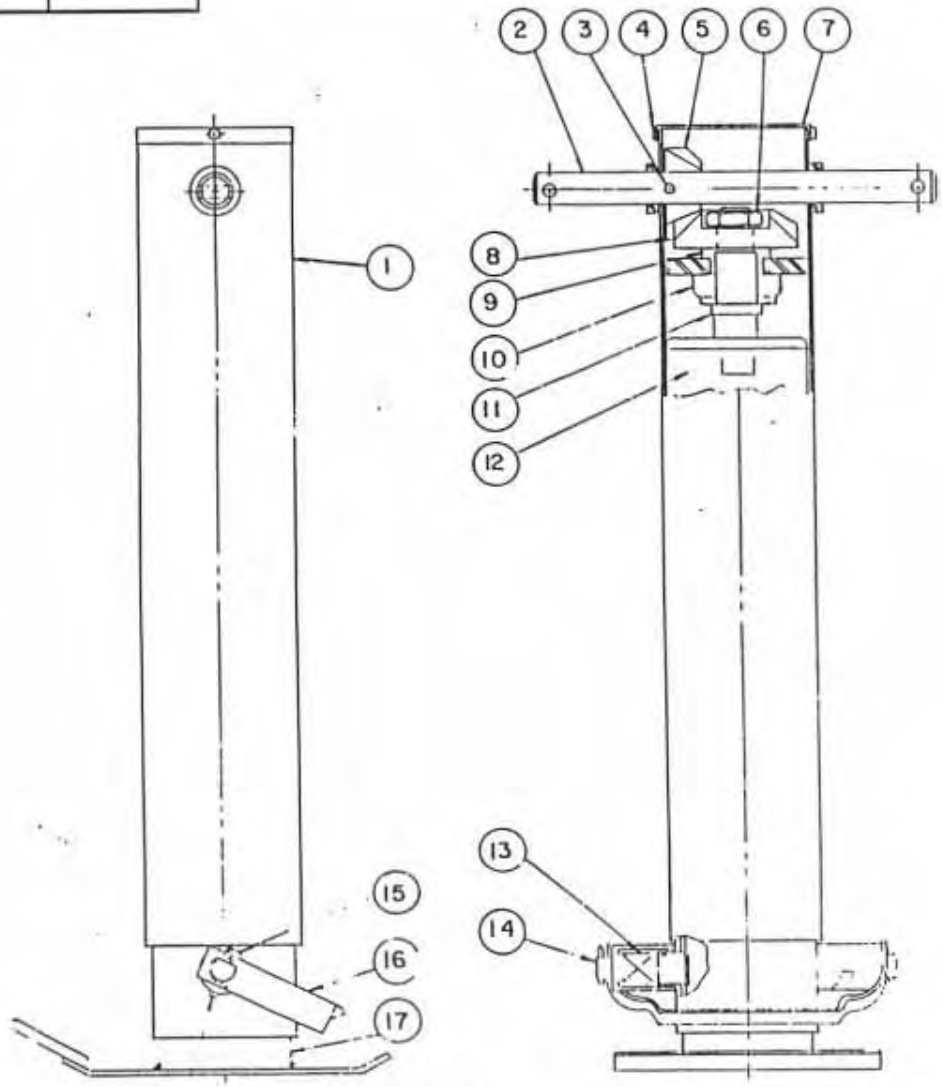

(18) -INSERT ROLL PIN UNTIL FLUSH WITH OUTSIDE OF TUBE.

QUANTITY			ITEM	D'S	PART No	DESCRIPTION
2	18	A	480287	ROLL PIN
1	17	A	480286	DROP LEG S/A
1	16	A	480285	SHOT PIN HANDLE
2	15	A	480284	COTTER PIN
2	14	A	480283	SHOT PIN
2	13	A	480282	COMP SPRING
1	12	A	480281	INNER LEG S/A
1	11	A	480280	SPECIAL WASHER
1	10	A	480279	THRUST BEARING
1	9	A	480278	BUSHING
1	8	A	480277	BEVEL GEAR
1	7	A	480276	COVER
1	6	A	480275	JAM NUT
1	5	A	480274	BEVEL PINION GEAR
2	4	A	480273	SELF TAPPING SCR.
1	3	A	480272	SPIRAL PIN
1	2	A	480271	CRANK SHAFT
1	1	A	480270	OUTER LEG S/A

LIST OF MATERIAL

NEXT ASS'Y

UNLESS OTHERWISE NOTED ALL DIMENSIONS ARE IN INCHES. TOLERANCES UNLESS OTHERWISE SPECIFIED: ANGLES ± 1° | XX ± .02; FRACTIONAL ± 1/16 | XXX ± .010. REMOVE ALL BURRS AND SHARP EDGES. DO NOT SCALE THIS DRAWING. TOLERANCES NOT SHOWN ABOVE ARE PER ANSI Y14.5 1973.

DRAWN BY / DATE / CHK'D BY / DATE / ENG BY / DATE

THIS PRINT IS THE PROPERTY OF AUTO-CRANE CO. AND MUST NOT BE USED IN ANY MANNER OR THE MENTAL TO THEIR INTERESTS.

AUTO CRANE COMPANY

P.O. BOX 16048 • TULSA, OKLAHOMA 74116
4500 BROKEN ARROW EXPRESSWAY • 918/627-9515

TITLE: OUTRIGGER, MANUAL

SCALE	SIZE	DRAWING NO	REVISION
—	C	AW-480166	—

WEIGHT | SHEET 2 OF 2

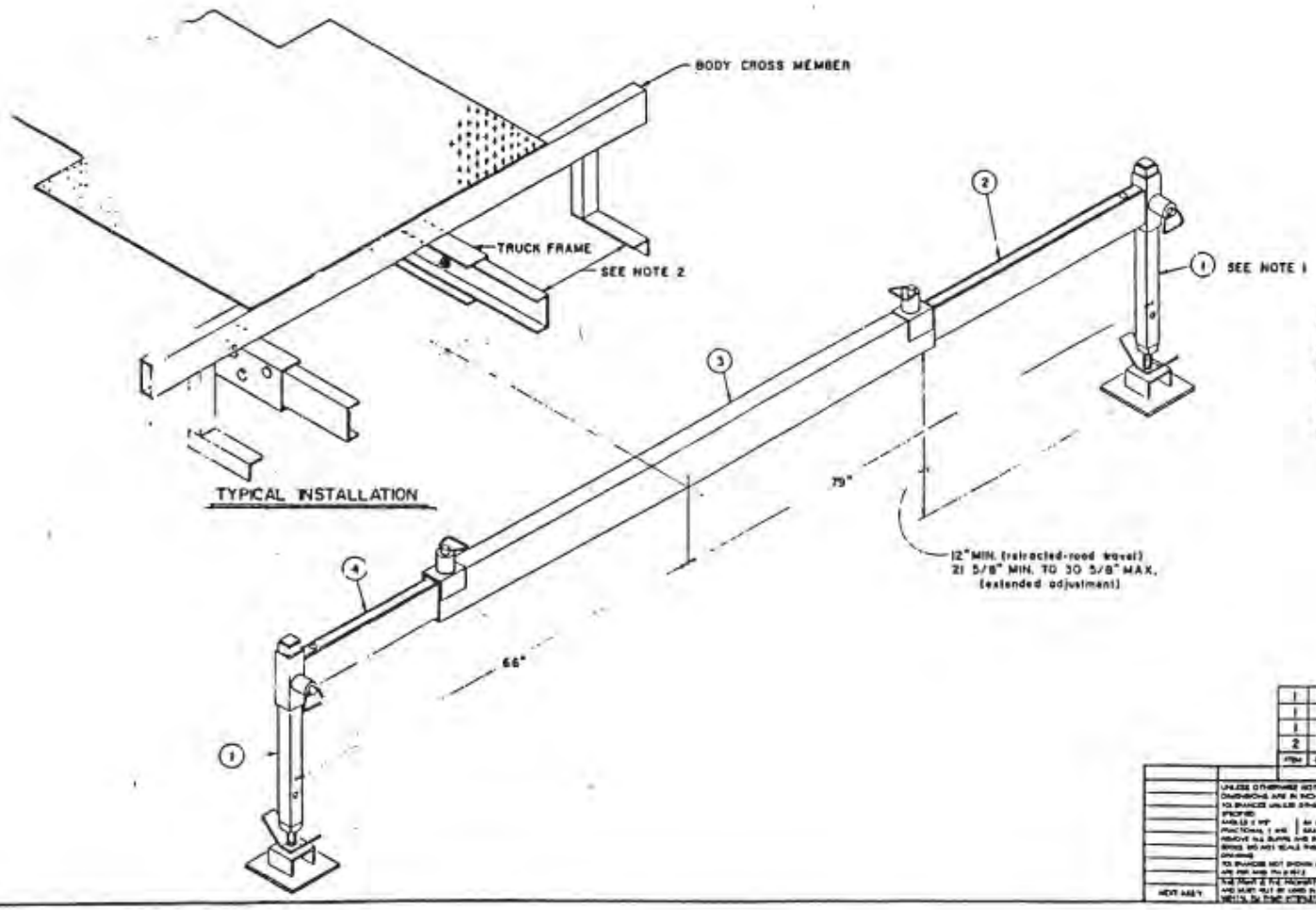

NOTES:

1. ADDITIONAL 3/4" HOLES MAY BE DRILLED IN THE LEG ASSEMBLIES FOR PROPER HEIGHTS. (DEPENDING ON INDIVIDUAL APPLICATIONS.)

2. WELD ITEM 3 TO FRAME EXTENSIONS AND CROSS MEMBER EXTENSIONS.

ITEM	QTY	DWG	PART NO	DESCRIPTION
1	4	C	360325	SOCKET / PULL PIN ASS'Y
1	3	C	361000-001	O.R. SOCKET / PULL PIN ASS'Y
1	2	C	360302	SOCKET / PULL PIN ASS'Y
2	1	C	360301	LEG ASS'Y

LIST OF MATERIAL

AUTO CRANE COMPANY

STABILIZER ASSEMBLY

SIZE D AW-361000-001

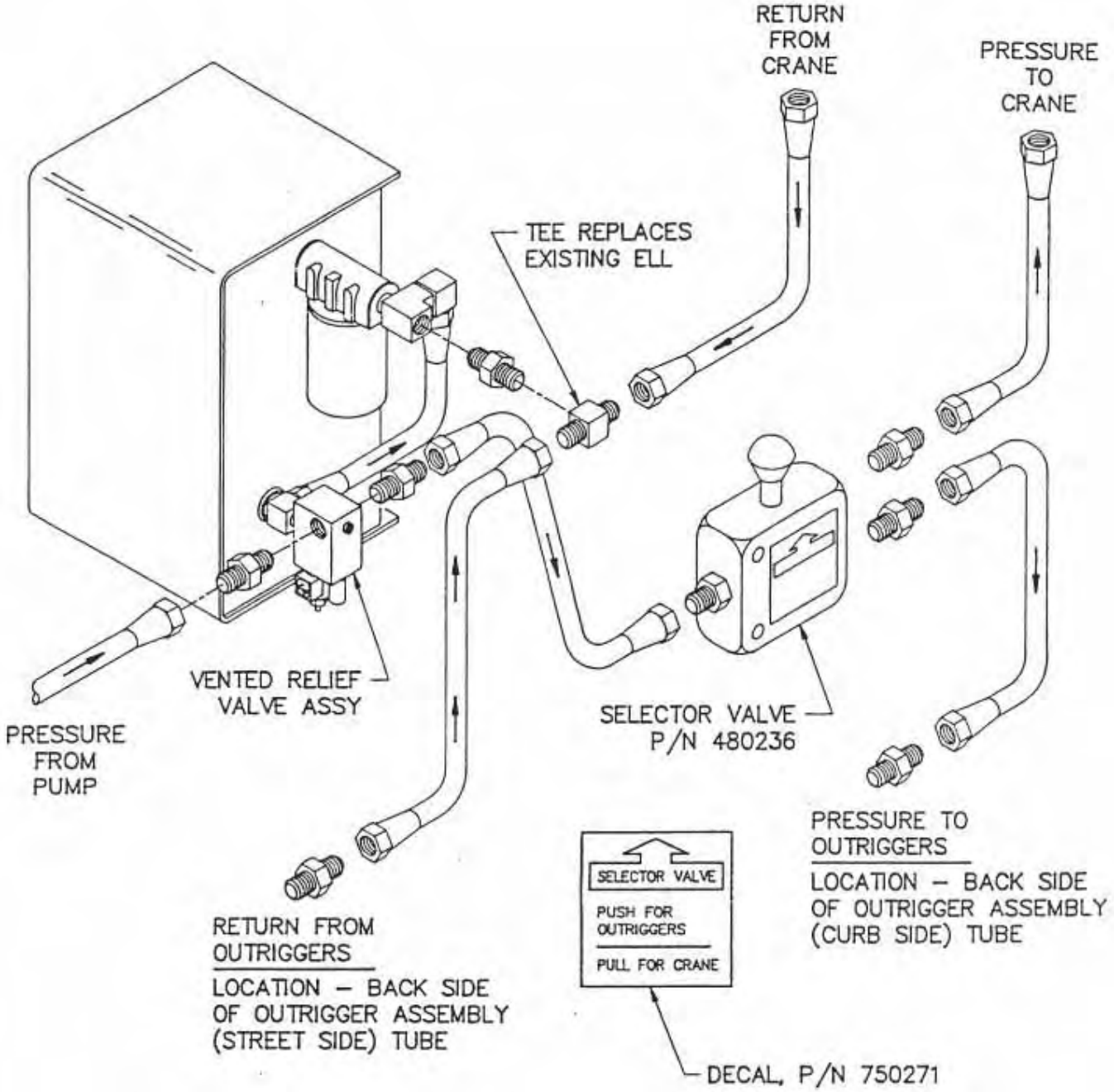

CAUTION:

A RELIEF VALVE MUST BE LOCATED IN THE OUTRIGGER PRESSURE LINE OR DAMAGE MAY OCCUR TO HYDRAULIC COMPONENTS. PLACEMENT OF THE RELIEF VALVE UPSTREAM OF THE SELECTOR VALVE IS PREFERRED.

AW–480235
OUTRIGGER INSTALLATION KIT

FIXTURE NO.	FINISH NO.

CHG LTR	REVISIONS DESCRIPTION	DATE	APP'D

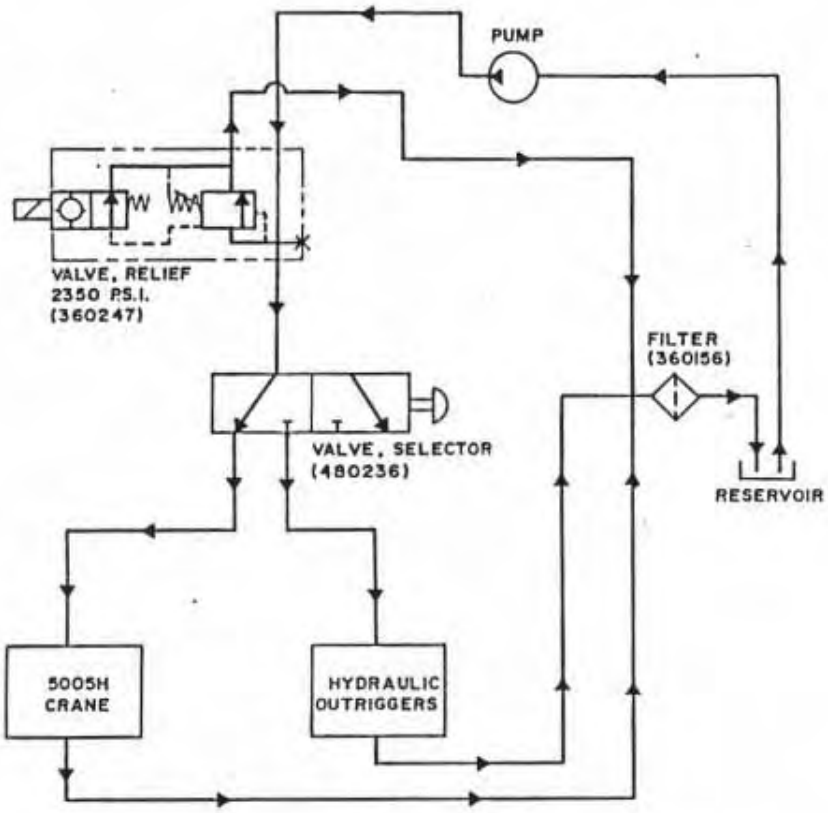

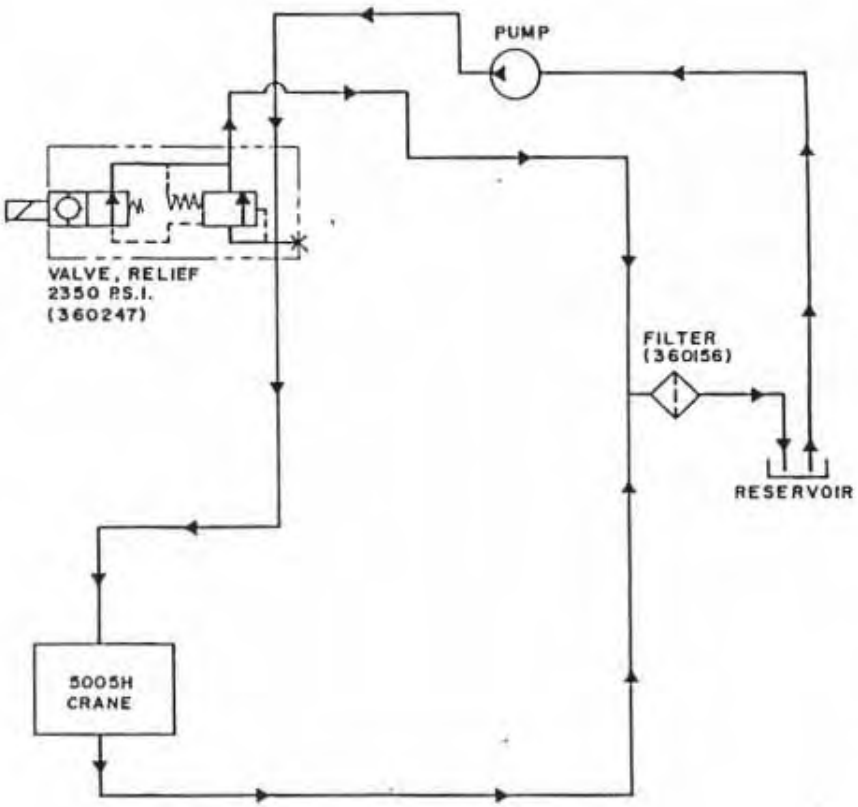

ITEM	Q/S	PART NO	DESCRIPTION
QUANTITY		LIST OF MATERIAL	

UNLESS OTHERWISE NOTED ALL DIMENSIONS ARE IN INCHES. TOLERANCES UNLESS OTHERWISE SPECIFIED
ANGLES ± 1/2° | .XX ± .40
FRACTIONAL ± 1/16 | .XXX ± .010
REMOVE ALL BURRS AND SHARP EDGES. DO NOT SCALE THIS DRAWING
TOLERANCES NOT SHOWN ABOVE ARE PER ANSI Y14.5-1973

DRAWN BY R.D.
DATE 7/16/86
CHK'D BY
DATE
ENG BY
DATE

AUTO CRANE COMPANY

TITLE
HYDRAULIC SCHEMATIC
5005H
WITH / WITHOUT HYDRAULIC OUTRIGGERS

SCALE	SIZE	DRAWING NO	REVISION
	C	AW-360655	

NOTES

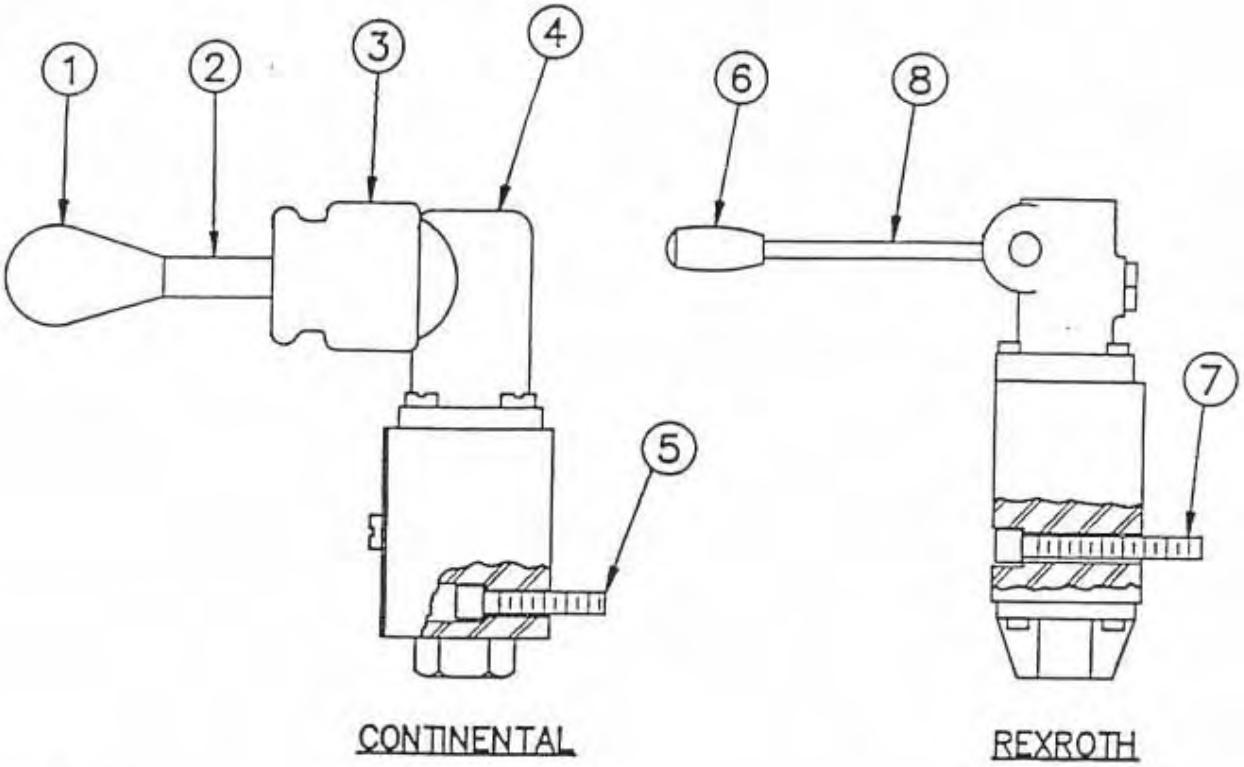

SEAL KIT (CONTINENTAL)
480230–009

SEAL KITS (REXROTH)
480230–010, BUNA (LOW TEMI
480230–011, VITA (HIGH TEMP

AW–073. OUTRIGGER VALVE (PART NO. 480230)

OUTRIGGER VALVE, AW-073

ITEM	QTY.	PART NO.	DESCRIPTION
1	1	480230-001	KNOB
2	1	480230-002	LEVER ASS'Y
3	1	480230-003	BOOT
4	1	480230-004	HOUSING, ASS'Y
5	1	480230-005	BOLT KIT (4 SOC. HD. SCREWS #10 - 24 X 7/8)
6	1	480230-006	KNOB
7	1	480230-007	BOLT KIT(4, SOC. HD. SCREWS #10 - 24 X 2" LG)
8	1	480230-008	LEVER ASS'Y

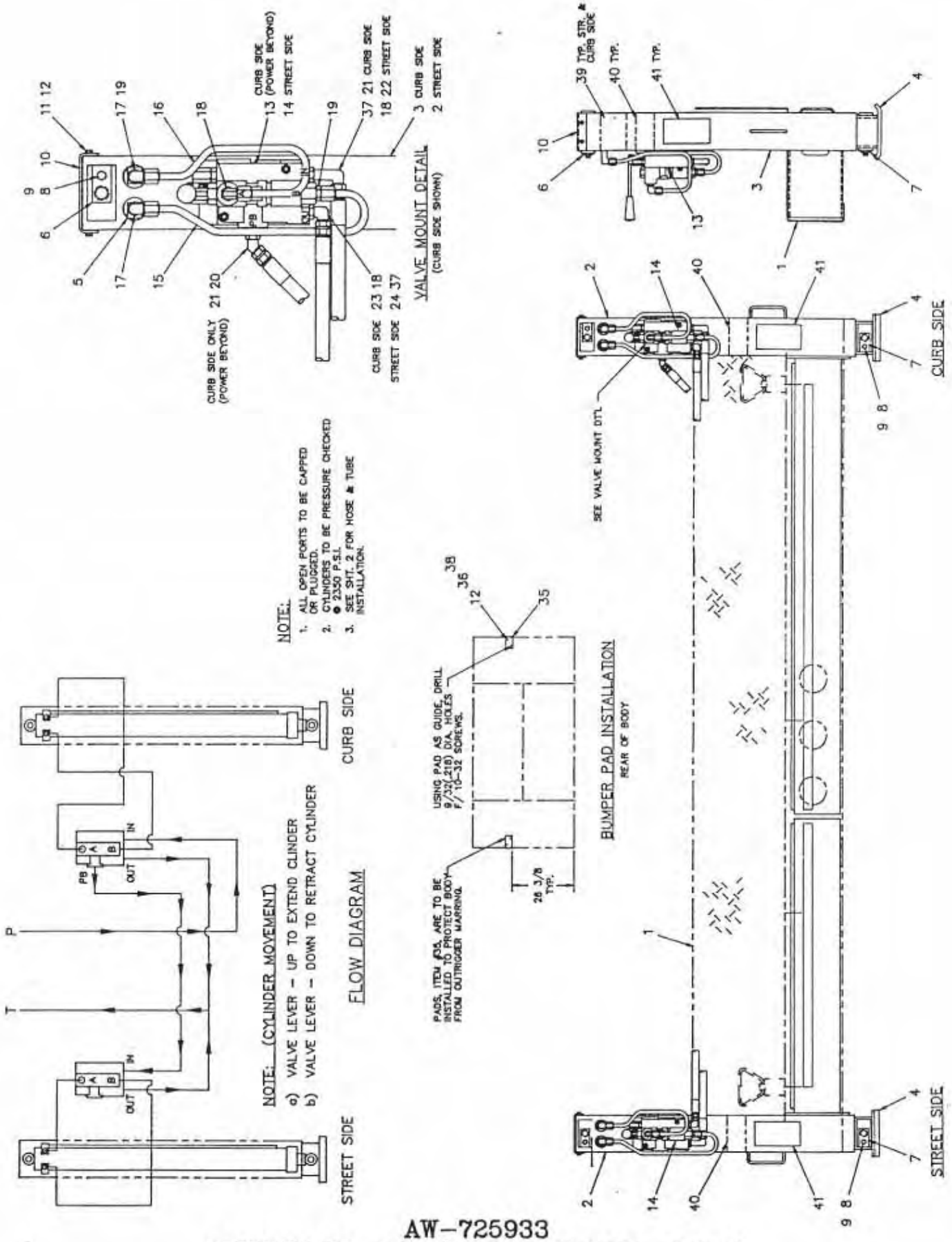

AW-725933
OUTRIGGER, 36K (MAN. OUT/HYD. DOWN)

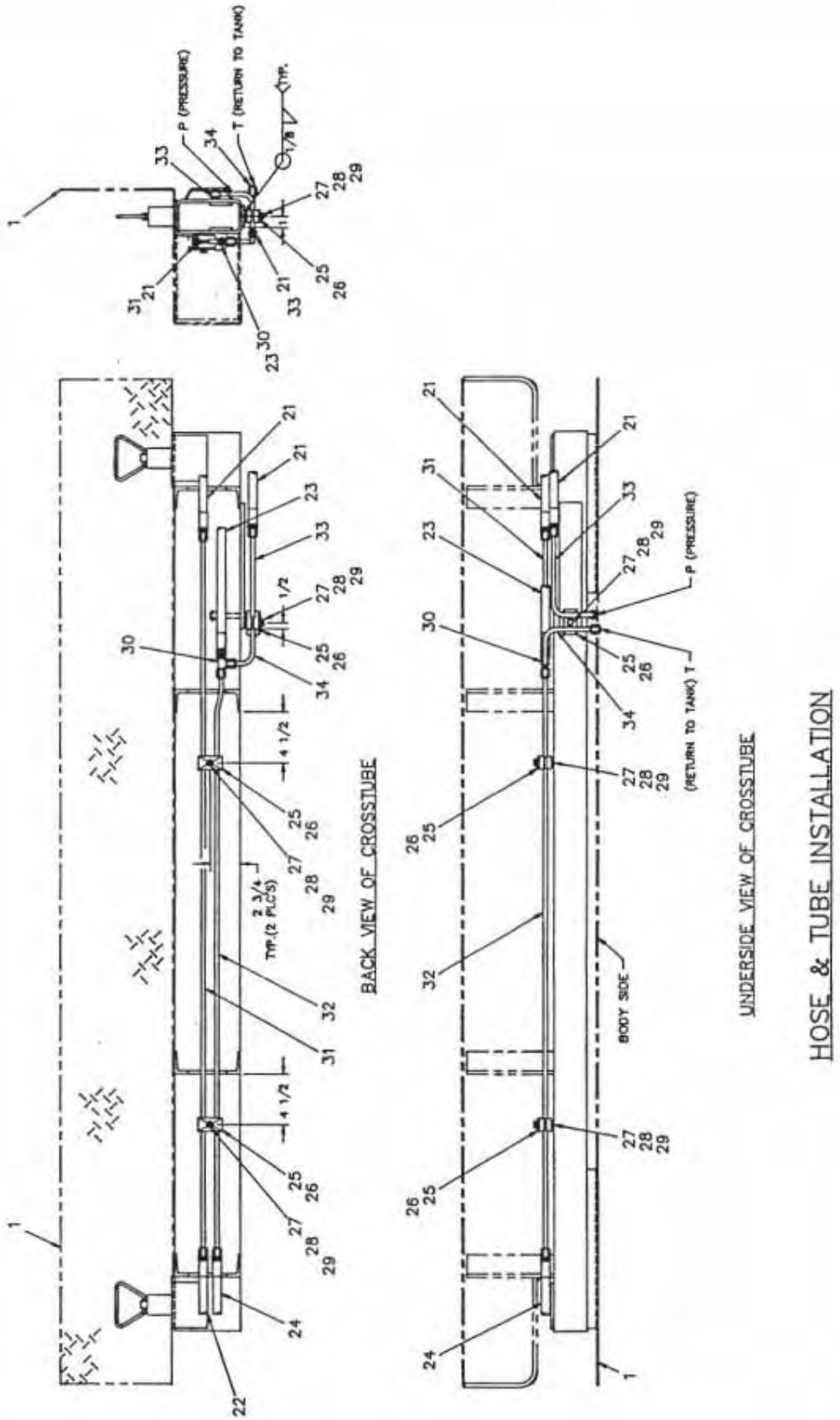

AW-725933
OUTRIGGER, 36K (MAN. OUT/HYD. DOWN)

AW-725933
OUTRIGGER, 36K (MAN. OUT/HYD. DOWN)

ITEM	QTY.	PART NO.	DESCRIPTION
1	1	725920	BUMPER (WELDMENT)
2	1	725941	TUBE, OUTER W/ SLIDE (STREET SIDE)
3	1	725944	TUBE, OUTER W/ SLIDE (CURB SIDE)
4	2	725935	TUBE, INNER (WELDMENT)
5	2	725949	CYLINDER, 36K HYD. O.R.
6	2	725946	PIN, UPPER CYL. (WELDMENT)
7	2	725948	PIN, LOWER CYL. (WELDMENT)
8	4	005901	SCREW, HEX HD 1/4-20NC X 1/2" LG.
9	4	020200	WASHER, SP LK 1/4
10	2	725945	CAP, TUBE TOP
11	8	370470	SCREW, THRD. CUT #10NC X 1/2" LG.
12	12	019800	WASHER, SP LK #10
13	1	752480	VALVE, DUKES 1618AS (W/ POWER BEYOND)
14	1	752477	VALVE, MODIF. (W/O POWER BEYOND)
15	2	725950	TUBE ASSEMBLY
16	2	725951	TUBE ASSEMBLY
17	4	480194	ELL 90 -6 SWIVEL
18	4	241175	ELL 90, O-RING -6 JIC
19	6	200876	ADAPTER, STR. O-RING -6 JIC
20	1	480195	ELL 45, O-RING -6 JIC
21	2	480225	HOSE ASSEMBLY
22	1	812204-035	HOSE ASSEMBLY
23	1	812203-062	HOSE ASSEMBLY
24	1	812204-039	HOSE ASSEMBLY
25	3	480232	CLAMP HALVES
26	3	480233	PLATE, TWIN COVER
27	3	007805	SCREW, HEX HD 5/16NC X 1 1/2" LG.
28	3	020600	WASHER, SP LK 5/16
29	3	016500	NUT, HEX 5/16NC
30	1	367134	TEE, UNION -6 JIC
31	1	725952	TUBE ASSEMBLY
32	1	725953	TUBE ASSEMBLY
33	1	725954	TUBE ASSEMBLY
34	1	725955	TUBE ASSEMBLY
35	2	725931	PAD, OUTRIGGER BUMPER
36	4	750657	SCREW, FL HD SOC 10-32 X 5/8" LG.
37	2	330645	ELL 90°, O-RING LONG
38	4	015600	NUT, HEX #10NF
39	2	725961	DECAL, DANGER
40	4	759017	DECAL, CAUTION
41	4	040581	DECAL, DANGER

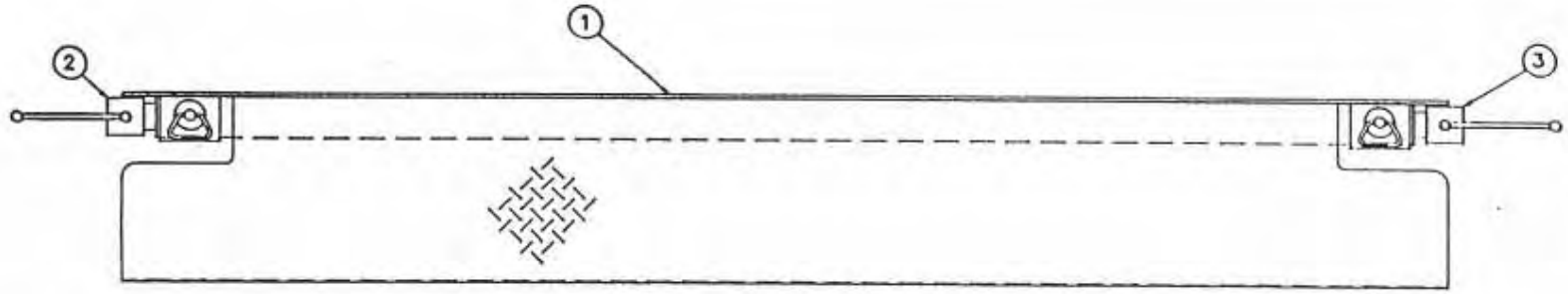

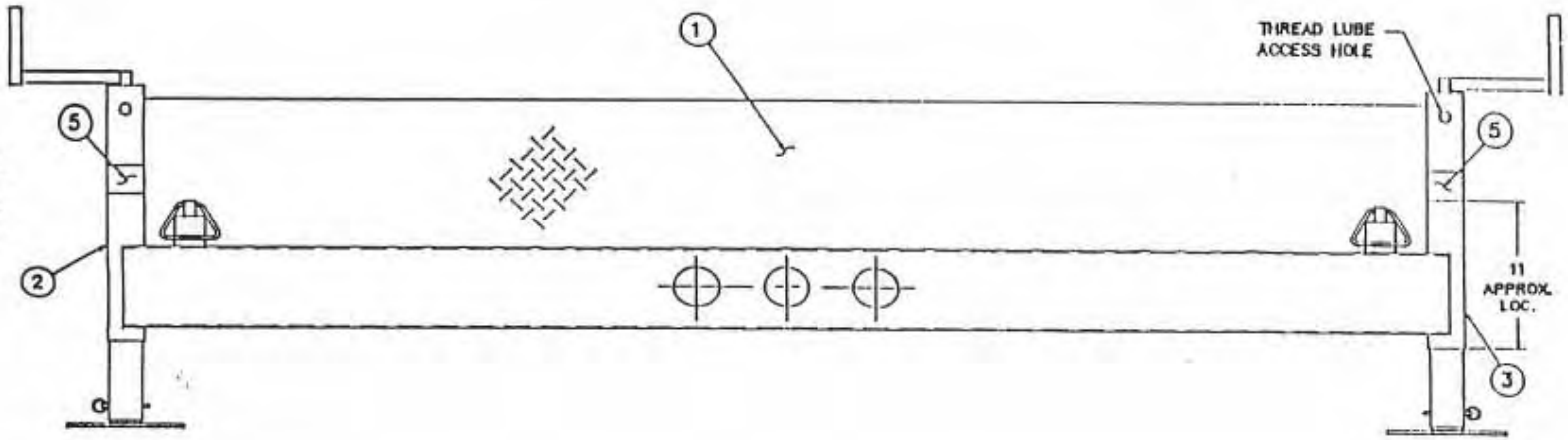

STREET SIDE

CURB SIDE

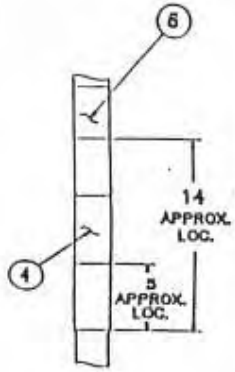

(TYP. STREET & CURB SIDE)

7-10.0.0

ITEM	QTY	PART No.	DESCRIPTION
6	2	725962	DECAL, DANGER
5	2	759017	DECAL, CAUTION
4	2	040581	DECAL, DANGER CRUSHING
3	1	725592	SLIDE, WITH CRANKDOWN LEG (CURB SIDE)
2	1	725593	SLIDE, WITH CRANKDOWN LEG (STREET SIDE)
1	1	725200	BUMPER, WELDMENT

AUTO CRANE COMPANY
P.O. BOX 500697 TULSA, OKLAHOMA 74150-0697
4707 NORTH MINGO ROAD 918-836-0463

TITLE
MANUAL OUTRIGGER WITH CRANKDOWN LEG ASSEMBLY (36K BODY)

SCALE 1/8 | SIZE A | DRAWING NO. AW-725562 | REVISION -

WEIGHT | SHEET 1 OF 1

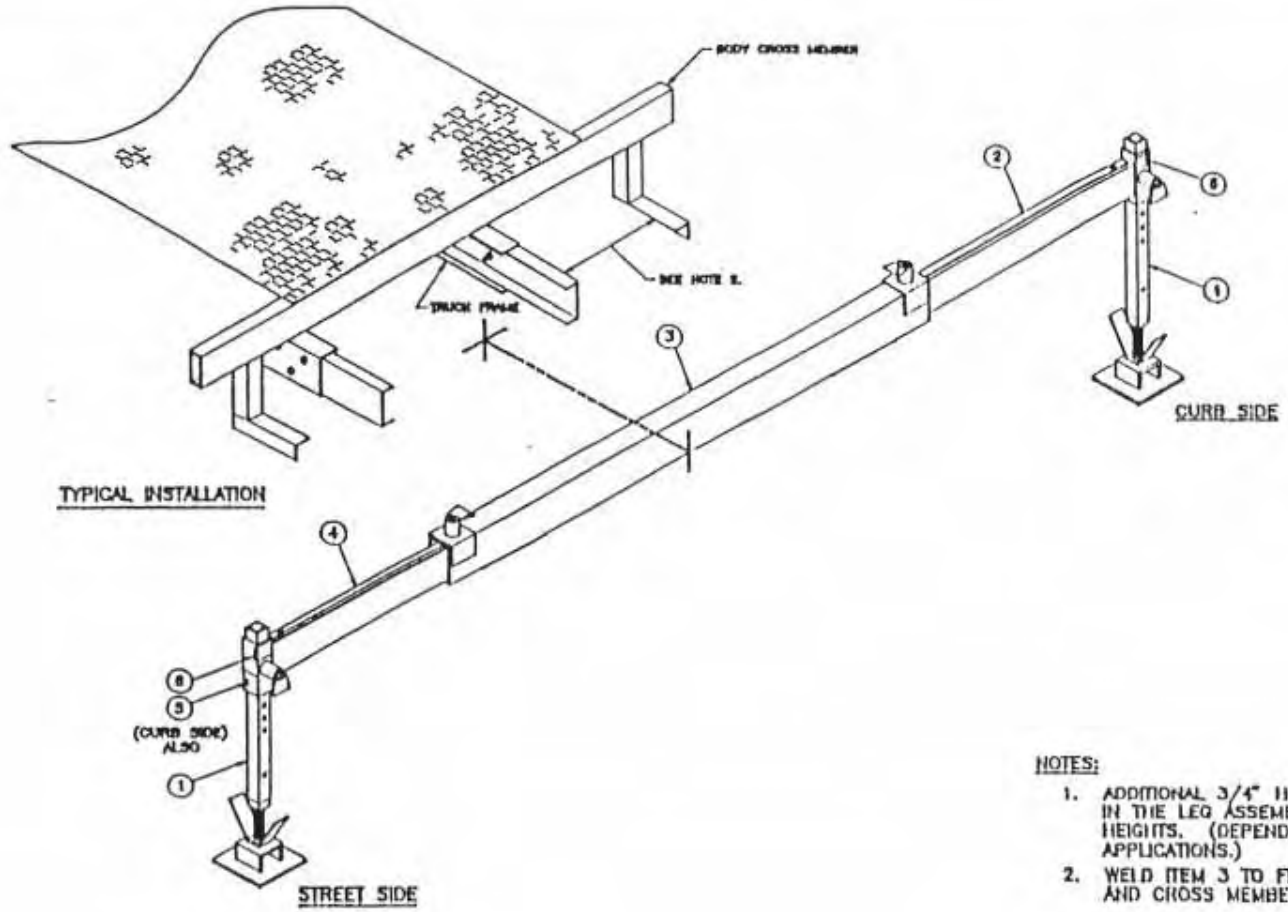

NOTES:

1. ADDITIONAL 3/4" HOLES MAY BE DRILLED IN THE LEG ASSEMBLIES FOR PROPER HEIGHTS. (DEPENDING ON INDIVIDUAL APPLICATIONS.)
2. WELD ITEM 3 TO FRAME EXTENSIONS AND CROSS MEMBER EXTENSIONS.

ITEM	QTY	PART No.	DESCRIPTION
6	2	759017	DECAL, CAUTION
5	2	040581	DECAL, DANGER CRUSHING
4	1	725589	SOCKET/ PULL PIN ASSEMBLY (STREET SIDE)
3	1	360303-001	O.R. SOCKET/ PULL PIN ASSEMBLY
2	1	725588	SOCKET/ PULL PIN ASSEMBLY (CURB SIDE)
1	2	360301	LEG ASSEMBLY

AUTO CRANE COMPANY
P.O. BOX 500697 TULSA, OKLAHOMA 74150-0697
4707 NORTH MINGO ROAD 918-836-0463

TITLE: STABILIZER ASSEMBLY

SCALE 1/8 | SIZE A | DRAWING NO. AW-725570 | REVISION -

WEIGHT | SHEET 1 OF 1

7-11.0.0

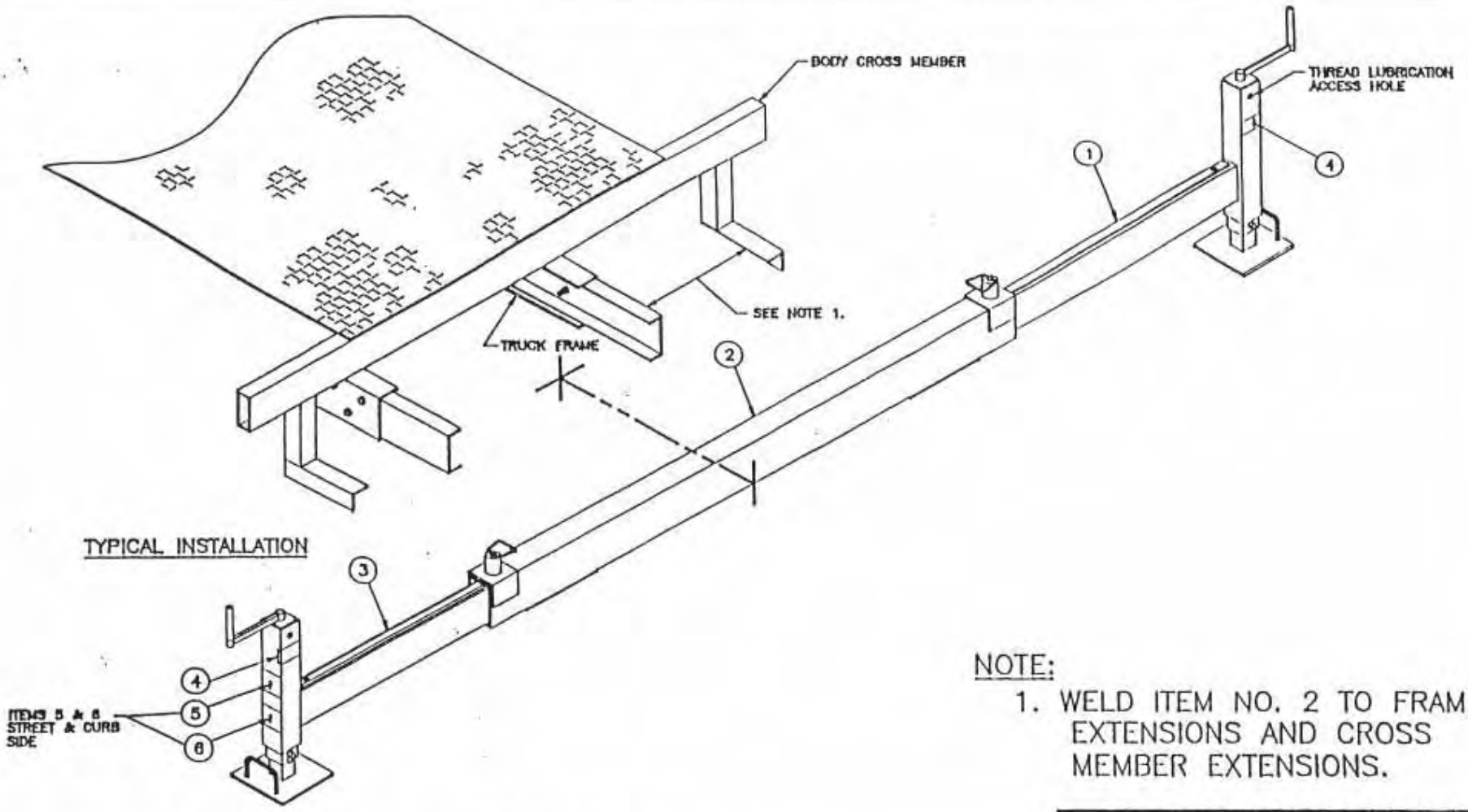

NOTE:

1. WELD ITEM NO. 2 TO FRAME EXTENSIONS AND CROSS MEMBER EXTENSIONS.

ITEM	QTY	PART No.	DESCRIPTION
6	2	040581	DECAL, DANGER CRUSHING
5	2	725962	DECAL, DANGER
4	2	759017	DECAL, CAUTION
3	1	725593	LEG ASSEMBLY (STREET SIDE)
2	1	360303-001	O.R. SOCKET/ PULL PIN ASSEMBLY
1	1	725592	LEG ASSEMBLY (CURB SIDE)

AUTO CRANE COMPANY
P.O. BOX 580697 TULSA, OKLAHOMA 74158-0697
4707 NORTH MINGO ROAD 918-836-0463

TITLE
STABILIZER ASSEMBLY WITH CRANKDOWN LEGS

SCALE 1/8 | SIZE A | DRAWING NO. AW-725572 | REVISION •
WEIGHT | SHEET 1 OF 1

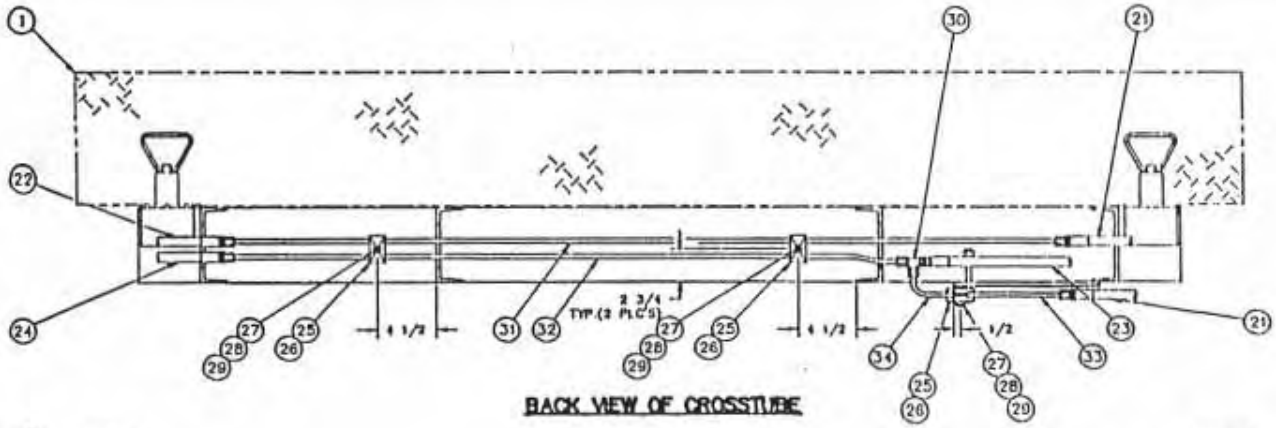

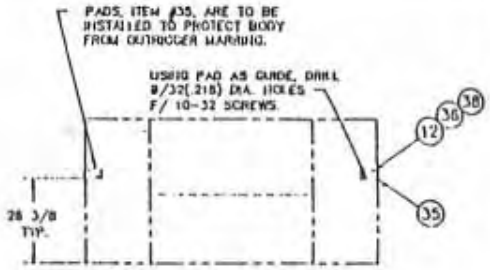

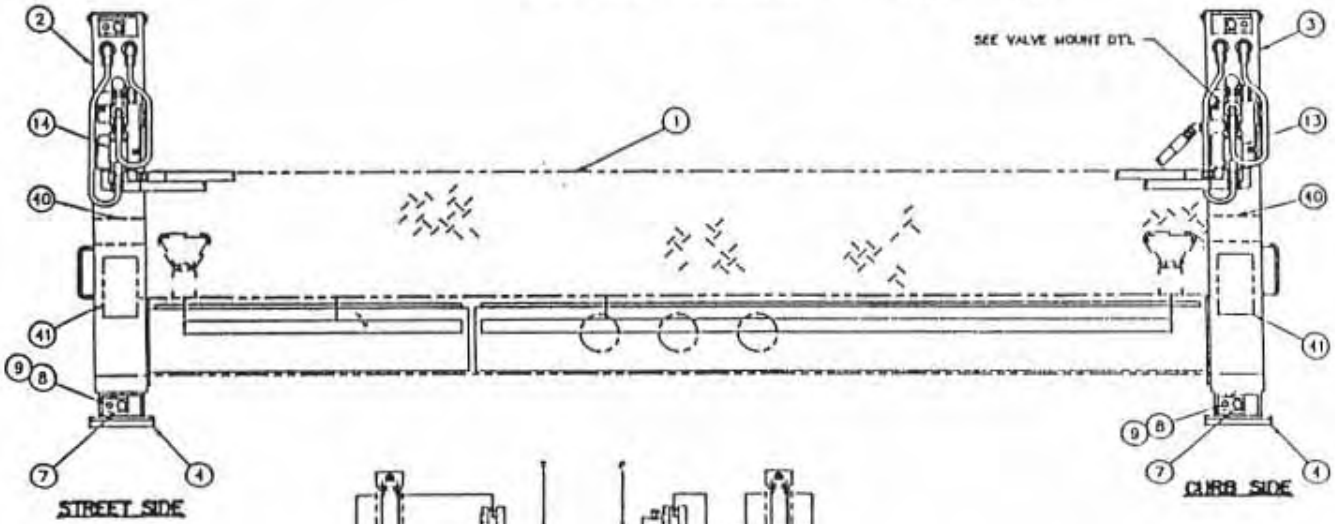

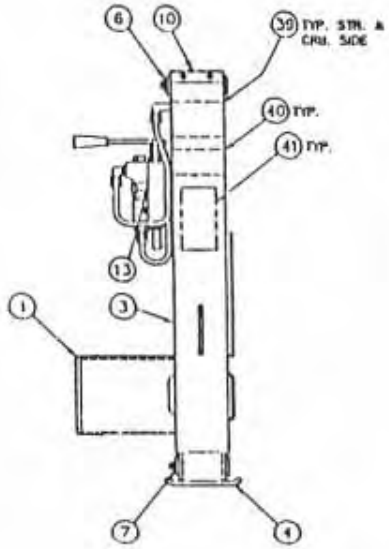

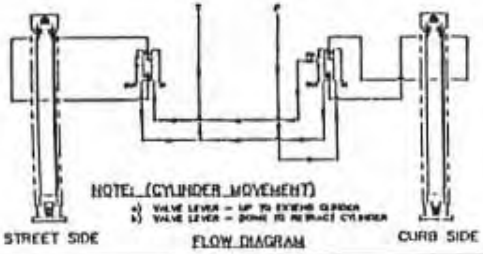

FLOW DIAGRAM

NOTE:

1. ALL OPEN PORTS TO BE CAPPED OR PLUGGED.
2. CYLINDERS TO BE PRESSURE CHECKED @ 3000 P.S.I.
3. SEE DTL. 2 FOR HOSE & TUBE INSTALLATION.

AUTO CRANE COMPANY

OUTRIGGER, 36K
(MAN. OUT / HYD. DOWN)

AW-720065

OUTRIGGER, 36K
(MAN. OUT/ HYD. DOWN)

ITEM	QTY.	PART NO.	DESCRIPTION
1	1	725920	BUMPER (WELDMENT)
2	1	725581	TUBE, OUTER WITH SLIDE (STREET SIDE)
3	1	725580	TUBE, OUTER WITH SLIDE (CURB SIDE)
4	2	725935	TUBE, INNER (WELDMENT)
5	2	725949	CYLINDER, 36K HYD. O.R.
6	2	725946	PIN, UPPER CYLINDER (WELDMENT)
7	2	725948	PIN, LOWER CYLINDER (WELDMENT)
8	4	005901	SCREW, HEX HEAD 1/4–20 NC x 1/2" LG.
9	4	020200	WASHER, SP. LK. 1/4
10	2	725945	CAP, TUBE TOP
11	8	370470	SCREW, THREAD CUT #10 NC x 1/2" LG.
12	12	019800	WASHER, SP. LK. #10
13	1	752480	VALVE, DUKES 1618AS (W/POWER BEYOND)
14	1	725477	VALVE, MODIF. (W.O./POWER BEYOND)
15	2	725950	TUBE, ASSEMBLY
16	2	725951	TUBE, ASSEMBLY
17	4	780194	ELL 90° #6 SWIVEL
18	4	241175	ELL 90°, O–RING #6 JIC
19	6	200876	ADAPTER, STR. O–RING #6 JIC
20	1	480195	ELL 45°, O–RING #6JIC
21	2	480225	HOSE ASSEMBLY
22	1	812204–035	HOSE ASSEMBLY
23	1	812203–062	HOSE ASSEMBLY
24	1	812204–039	HOSE ASSEMBLY
25	3	480232	CLAMP HALVES
26	3	480233	PLATE, TWIN COVER
27	3	007805	SCREW, HEX HEAD 5/16 NC x 1 1/2" LG.
28	3	020600	WASHER, SP. LK. 5/16
29	3	016500	NUT, HEX 5/16 NC
30	1	367134	TEE, UNION #6 JIC
31	1	725952	TUBE ASSEMBLY
32	1	725953	TUBE ASSEMBLY
33	1	725954	TUBE ASSEMBLY
34	1	725955	TUBE ASSEMBLY
35	2	725931	PAD, OUTRIGGER BUMPER
36	4	750657	SCREW, FLAT HEAD SOCKET 10–32 x 5/8" LG.
37	2	330645	ELL90°, O–RING LONG
38	4	015600	NUT, HEX #10 NF
39	2	725961	DECAL, DANGER
40	4	759017	DECAL, CAUTION
41	4	040581	DECAL, DANGER

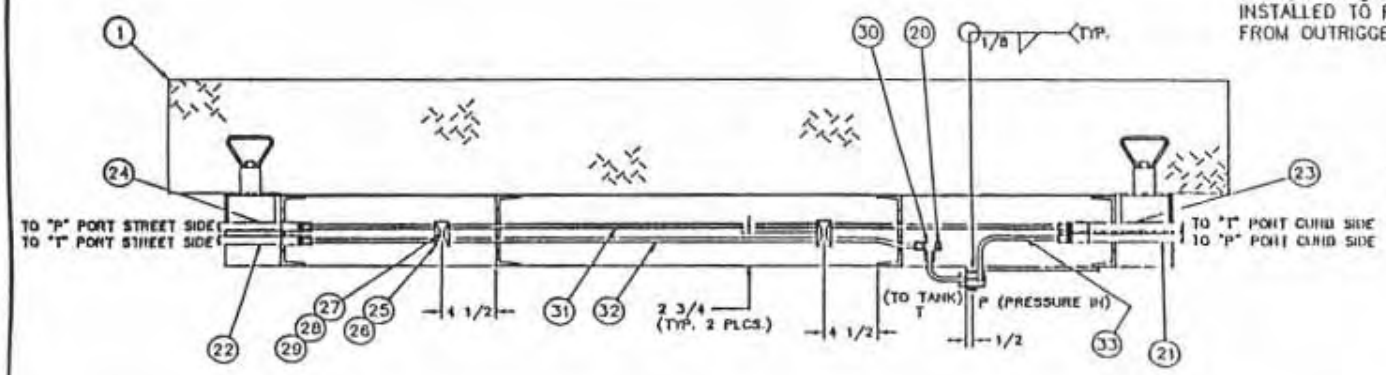

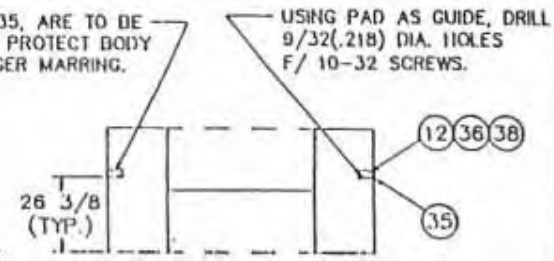

BUMPER PAD INSTALLATION
REAR OF BODY

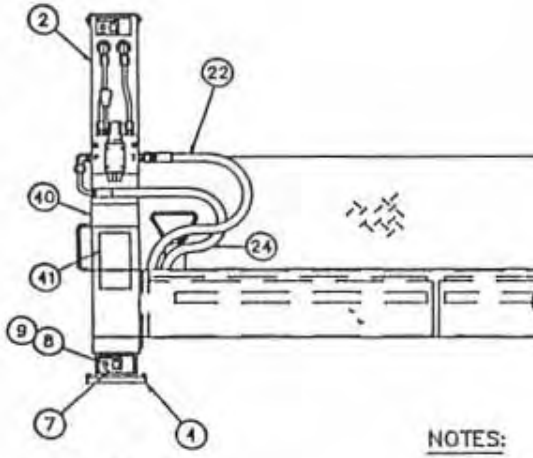

STREET SIDE

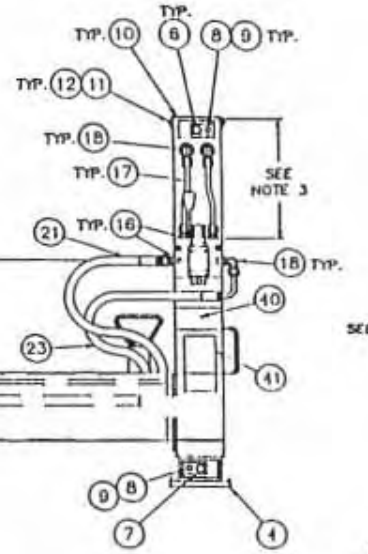

CURB SIDE

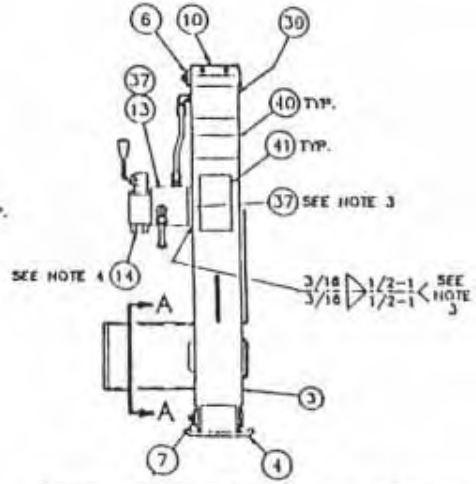

7-14.0.0

NOTES:

1. ALL OPEN PORTS TO BE CAPPED OR PLUGGED.
2. CYLINDERS TO BE PRESSURE CHECKED @ 2350 P.S.I.
3. LOCATE AND WELD ITEM 37 TO LEG AFTER ASSEMBLING MANIFOLD, TUBING AND FITTINGS.
4. BEND HANDLE UP 90°

AUTO CRANE COMPANY
P.O. BOX 580697 TULSA, OKLAHOMA 74158-0697
4707 NORTH MINGO ROAD 918-836-0463

TITLE
OUTRIGGER, 36K
(MAN. OUT/ HYD. DOWN)

SCALE	SIZE	DRAWING NO.	REVISION
1/8	A	AW-725567	.

WEIGHT

SHEET 1 OF 1

OUTRIGGER, 36K
(MAN. OUT/ HYD. DOWN)

ITEM	QTY.	PART NO.	DESCRIPTION
1	1	725920	BUMPER (WELDMENT)
2	1	725587	TUBE, OUTER WITH SLIDE (STREET SIDE)
3	1	725586	TUBE, OUTER WITH SLIDE (CURB SIDE)
4	2	725935	TUBE, INNER (WELDMENT)
5	2	725949	CYLINDER, 36K HYD. O.R.
6	2	725946	PIN, UPPER CYLINDER (WELDMENT)
7	2	725948	PIN, LOWER CYLINDER (WELDMENT)
8	4	005901	SCREW, HEX HEAD 1/4–20 NC x 1/2" LG.
9	4	020200	WASHER, SP. LK. 1/4
10	2	725945	CAP, TUBE TOP
11	8	370470	SCREW, THREAD CUT #10 NC x 1/2" LG.
12	12	019800	WASHER, SP. LK. #10
13	2	480231	MANIFOLD, OUTRIGGERS
14	2	480230	VALVE, MANUAL OUTRIGGER
15	4	003906	SCREW, SOCKET HEAD 5/16–18 x 3 1/4" LG.
16	6	200876	ADAPTOR, STR. –6 ORM/ –6 JIC
17	4	725918	TUBE, ASSEMBLY
18	6	241175	ELL 90°, O–RING #6 JIC
19	–	–	–
20	1	360446	CAP, –6 JIC
21	2	480225	HOSE ASSEMBLY
22	1	812204–035	HOSE ASSEMBLY
23	1	812212–058	HOSE ASSEMBLY
24	1	812212–039	HOSE ASSEMBLY
25	3	480232	CLAMP HALVES
26	3	480233	PLATE, TWIN COVER
27	3	007805	SCREW, HEX HEAD 5/16 NC x 1 1/2" LG.
28	3	020600	WASHER, SP. LK. 5/16
29	3	016500	NUT, HEX 5/16 NC
30	1	367134	TEE, UNION #6 JIC
31	1	725952	TUBE ASSEMBLY
32	1	725953	TUBE ASSEMBLY
33	1	725954	TUBE ASSEMBLY
34	1	725955	TUBE ASSEMBLY
35	2	725931	PAD, OUTRIGGER BUMPER
36	4	750657	SCREW, FLAT HEAD SOCKET 10–32 x 5/8" LG.
37	2	725919	PLATE, OUTRIGGER
38	4	015600	NUT, HEX #10 NF
39	2	725961	DECAL, DANGER
40	4	759017	DECAL, CAUTION
41	4	040581	DECAL, DANGER

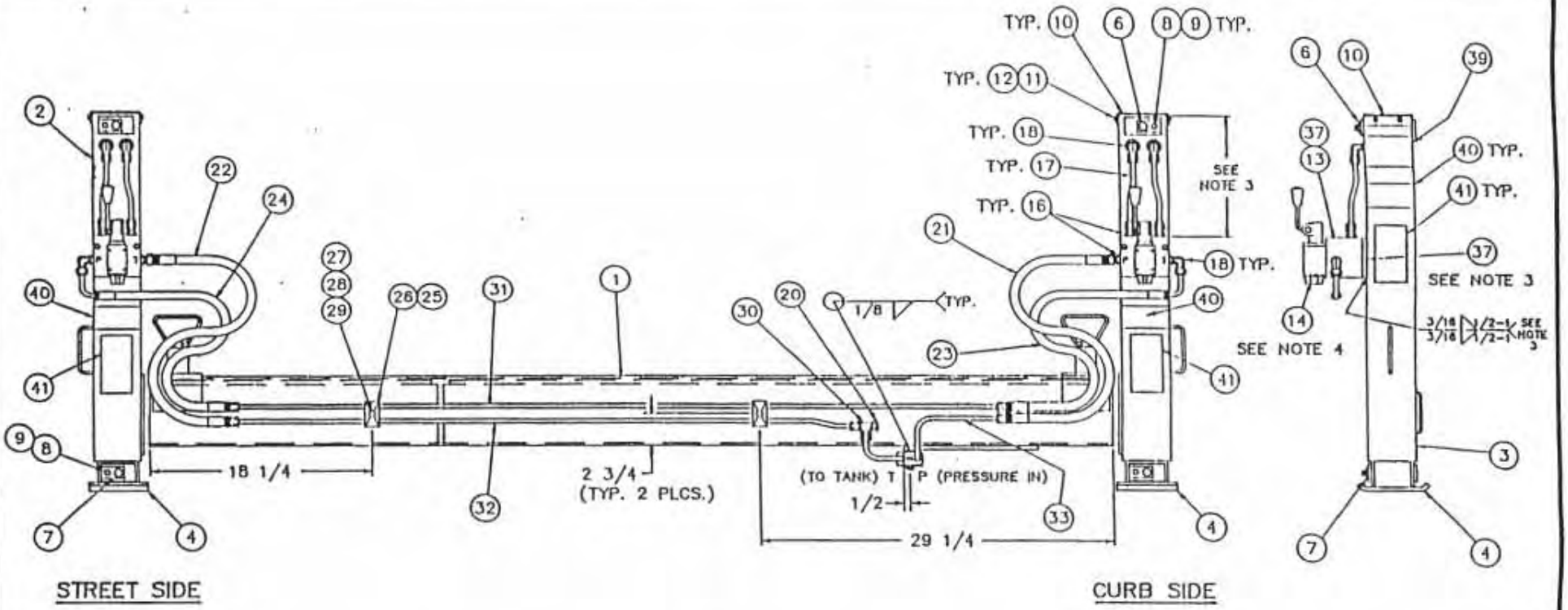

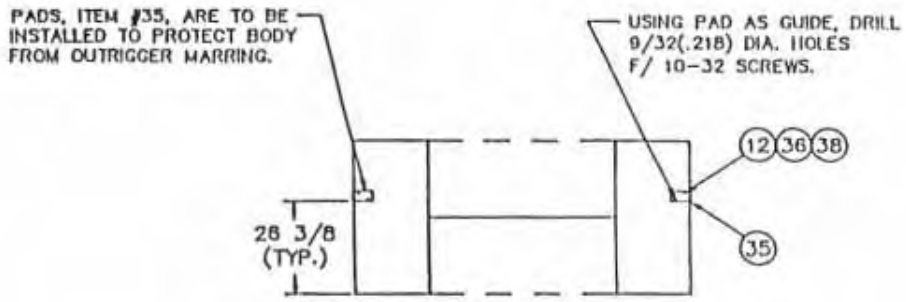

BUMPER PAD INSTALLATION
REAR OF BODY

NOTES:

1. ALL OPEN PORTS TO BE CAPPED OR PLUGGED.
2. CYLINDER TO BE PRESSURE CHECKED @ 2350 P.S.I.
3. LOCATE AND WELD ITEM NO. 37 TO LEG AFTER ASSEMBLING MANIFOLD, TUBING AND FITTINGS.
4. BEND HANDLE UP 90°.

AUTO CRANE COMPANY

P.O. BOX 580697 TULSA, OKLAHOMA 74158-0697
4707 NORTH MINGO ROAD 918-836-0463

TITLE

OUTRIGGER, 36K W.O. BUMPER (MAN. OUT/ HYD. DOWN)

SCALE	SIZE	DRAWING NO.	REVISION
1/8	A	AW-725576	.

WEIGHT

SHEET 1 OF 1

OUTRIGGER, 36K W.O. BUMPER
(MAN. OUT/ HYD. DOWN)

ITEM	QTY.	PART NO.	DESCRIPTION
1	1	725921	O.R. SOCKET PULL PIN ASSEMBLY
2	1	725587	TUBE, OUTER WITH SLIDE (STREET SIDE)
3	1	725586	TUBE, OUTER WITH SLIDE (CURB SIDE)
4	2	725935	TUBE, INNER (WELDMENT)
5	2	725949	CYLINDER, 36K HYD. O.R.
6	2	725946	PIN, UPPER CYLINDER (WELDMENT)
7	2	725948	PIN, LOWER CYLINDER (WELDMENT)
8	4	005901	SCREW, HEX HEAD 1/4–20 NC x 1/2" LG.
9	4	020200	WASHER, SP. LK. 1/4
10	2	725945	CAP, TUBE TOP
11	8	370470	SCREW, THREAD CUT #10 NC x 1/2" LG.
12	12	019800	WASHER, SP. LK. #10
13	2	480231	MANIFOLD, OUTRIGGERS
14	2	480230	VALVE, MANUAL OUTRIGGER
15	4	003906	SCREW, SOCKET HEAD 5/16–18 x 3 1/4" LG.
16	6	200876	ADAPTOR, STR. –6 ORM/ –6 JIC
17	4	725918	TUBE, ASSEMBLY
18	6	241175	ELL 90°, O–RING #6 JIC
19	–	–	–
20	1	360446	CAP, –6 JIC
21	2	480225	HOSE ASSEMBLY
22	1	812204–035	HOSE ASSEMBLY
23	1	812212–058	HOSE ASSEMBLY
24	1	812212–039	HOSE ASSEMBLY
25	3	480232	CLAMP HALVES
26	3	480233	PLATE, TWIN COVER
27	3	007805	SCREW, HEX HEAD 5/16 NC x 1 1/2" LG.
28	3	020600	WASHER, SP. LK. 5/16
29	3	016500	NUT, HEX 5/16 NC
30	1	367134	TEE, UNION #6 JIC
31	1	725952	TUBE ASSEMBLY
32	1	725953	TUBE ASSEMBLY
33	1	725954	TUBE ASSEMBLY
34	1	725955	TUBE ASSEMBLY
35	2	725931	PAD, OUTRIGGER BUMPER
36	4	750657	SCREW, FLAT HEAD SOCKET 10–32 x 5/8" LG.
37	2	725919	PLATE, OUTRIGGER
38	4	015600	NUT, HEX #10 NF
39	2	725961	DECAL, DANGER
40	4	759017	DECAL, CAUTION
41	4	040581	DECAL, DANGER

FIXTURE NO	FINISH NO

CHG LTR	REVISIONS DESCRIPTION	DATE	APP

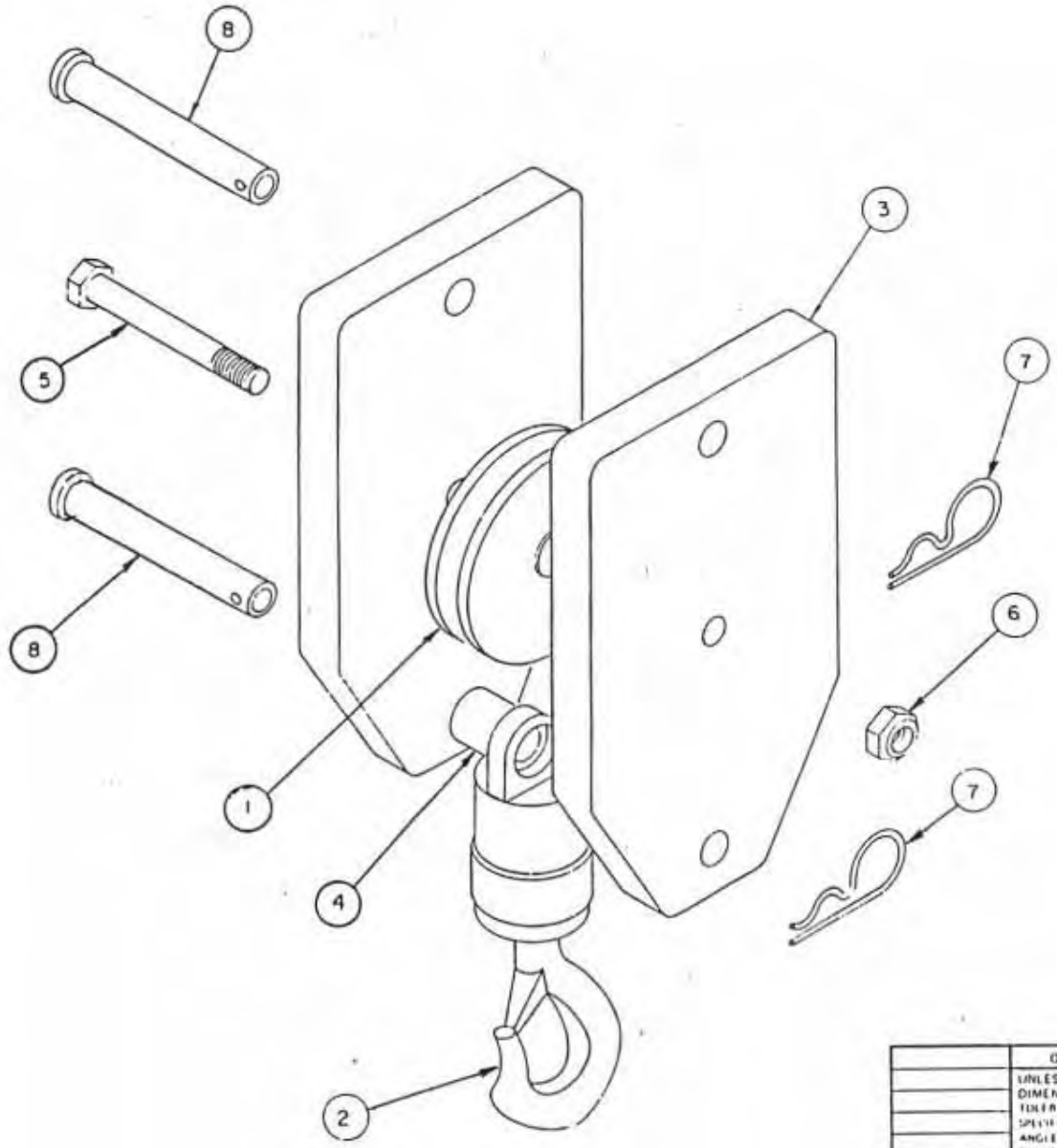

NOTES
1. FOR BEARING ONLY-
ORDER PART NUMBER 240234

ITEM	QTY	PART NO	DESCRIPTION
8	2	360605	PIN, BLOCK
7	2	360124	HITCH, PIN (HAIR PIN)
6	1	017800	NUT, HEX.-LOC 1/2 - 20
5	1	006801	SCREW, HX.-HD. 1/2 - 20 X 4" LG
4	1	240237	SPACER, BUSHING 1" O.D.
3	2	360601	BLOCK SIDE PLATE
2	1	200197	HOOK, SWIVEL
1	1	240236	SHEAVE ASSEMBLY

QUANTITY — LIST OF MATERIAL

UNLESS OTHERWISE NOTED ALL DIMENSIONS ARE IN INCHES
TOLERANCES UNLESS OTHERWISE SPECIFIED
ANGLES ± 1.2 ; .XX ± .40
FRACTIONAL ± 1/16 ; .XXX ± .010
REMOVE ALL BURRS AND SHARP EDGES DO NOT SCALE THIS DRAWING
TOLERANCES NOT SHOWN ABOVE ARE PER ANSI Y14.5 - 1972
THIS PRINT IS THE PROPERTY OF AUTO CRANE CO.

DRAWN BY R.P.
DATE 6-24-86
CHK BY
DATE
ENG BY
DATE

AUTO CRANE COMPANY

TITLE
TRAVELING BLOCK ASSEMBLY
5005H

SCALE — SIZE C — DRAWING NO AW - 360602 — REV

8-1.0.0

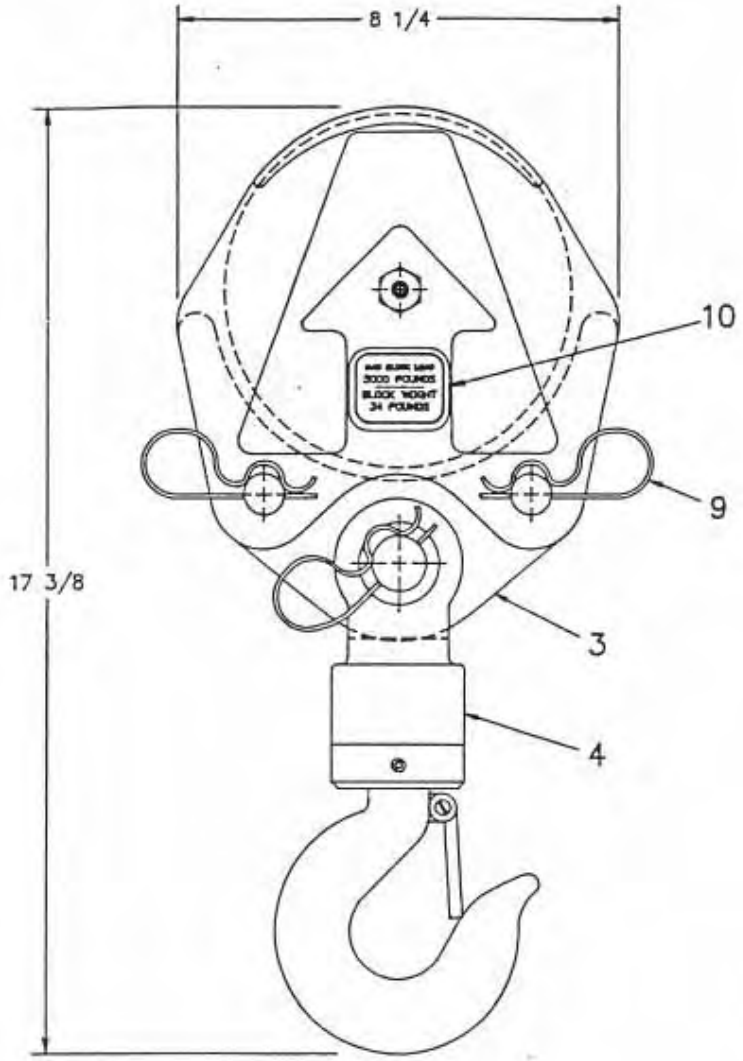

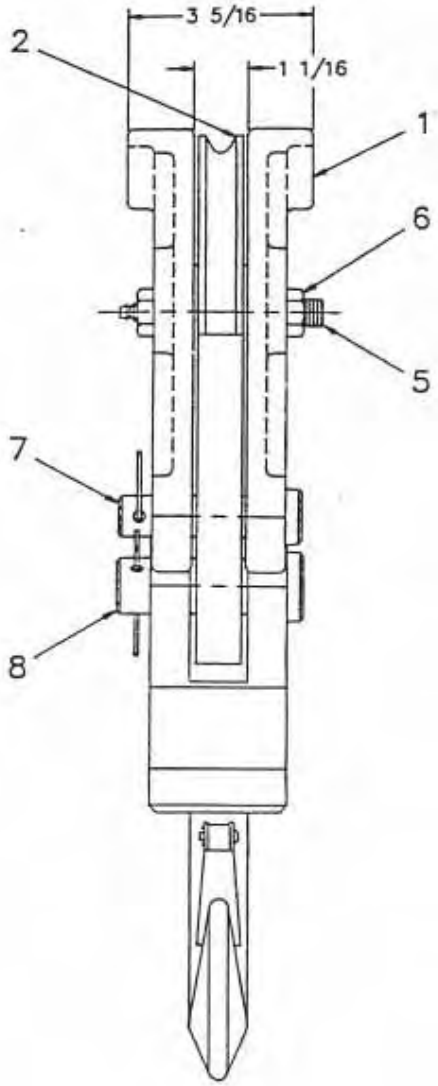

ITEM	QTY	P/N	DESCRIPTION
1	2	480362	SIDE PLATE (MACH.)
2	1	240236	SHEAVE ASSEMBLY
3	1	480364	TACKLE, LOWER
4	1	480371	HOOK, SWIVEL – 3 TON
5	1	480372	BOLT, SHEAVE w/ ZERK
6	1	017800	NUT, HX LK 1/2–20NF
7	2	480367	PIN, BLOCK
8	1	480368	PIN, SWIVEL HOOK
9	3	360124	PIN, HITCH (HAIR PIN)
10	2	360480–100	DECAL, MAX. LOAD

AW–360480
TRAVELING BLOCK ASSEMBLY
5005H/EH (SHORT)

NOTES

MODEL 5005H 10-16 MAXIMUM LOAD CHART

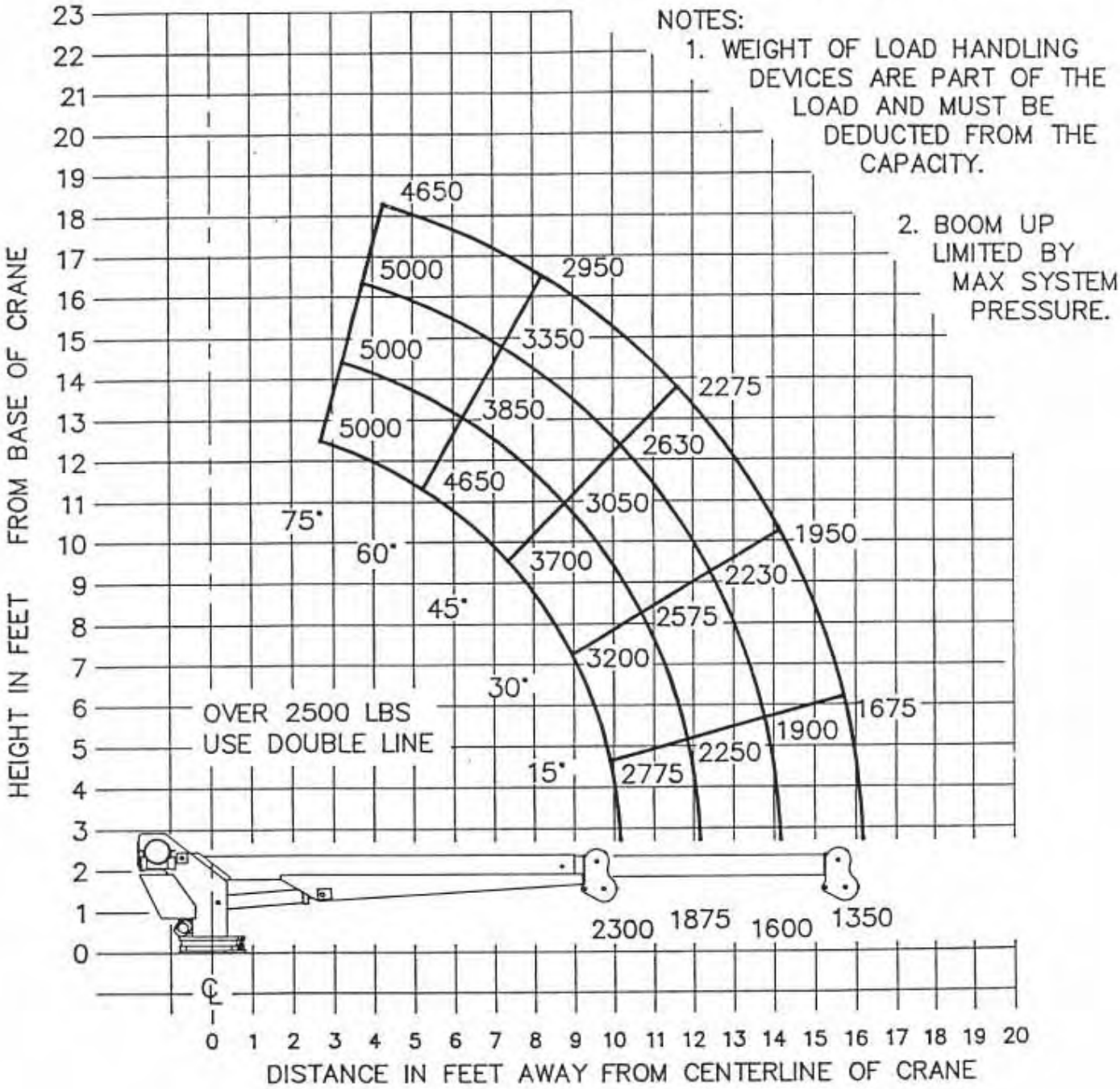

AW-380035
5005H LOAD CHART
MANUAL EXTENSION

MODEL 5005H 10-16 MAXIMUM LOAD CHART

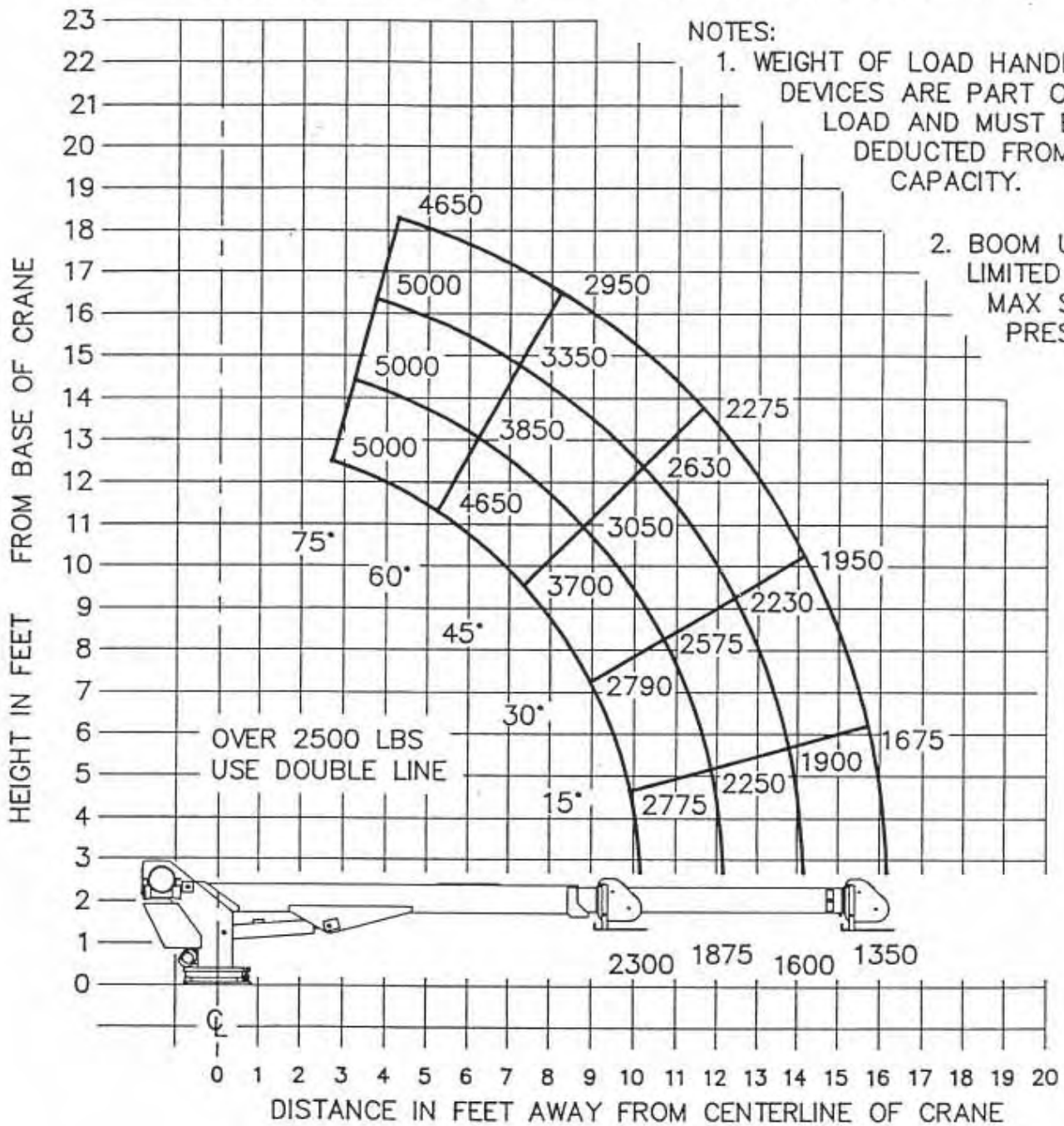

AW-380869
5005H LOAD CHART
10-16 BOOM

MODEL 5005H 10-16-20 MAXIMUM LOAD CHART

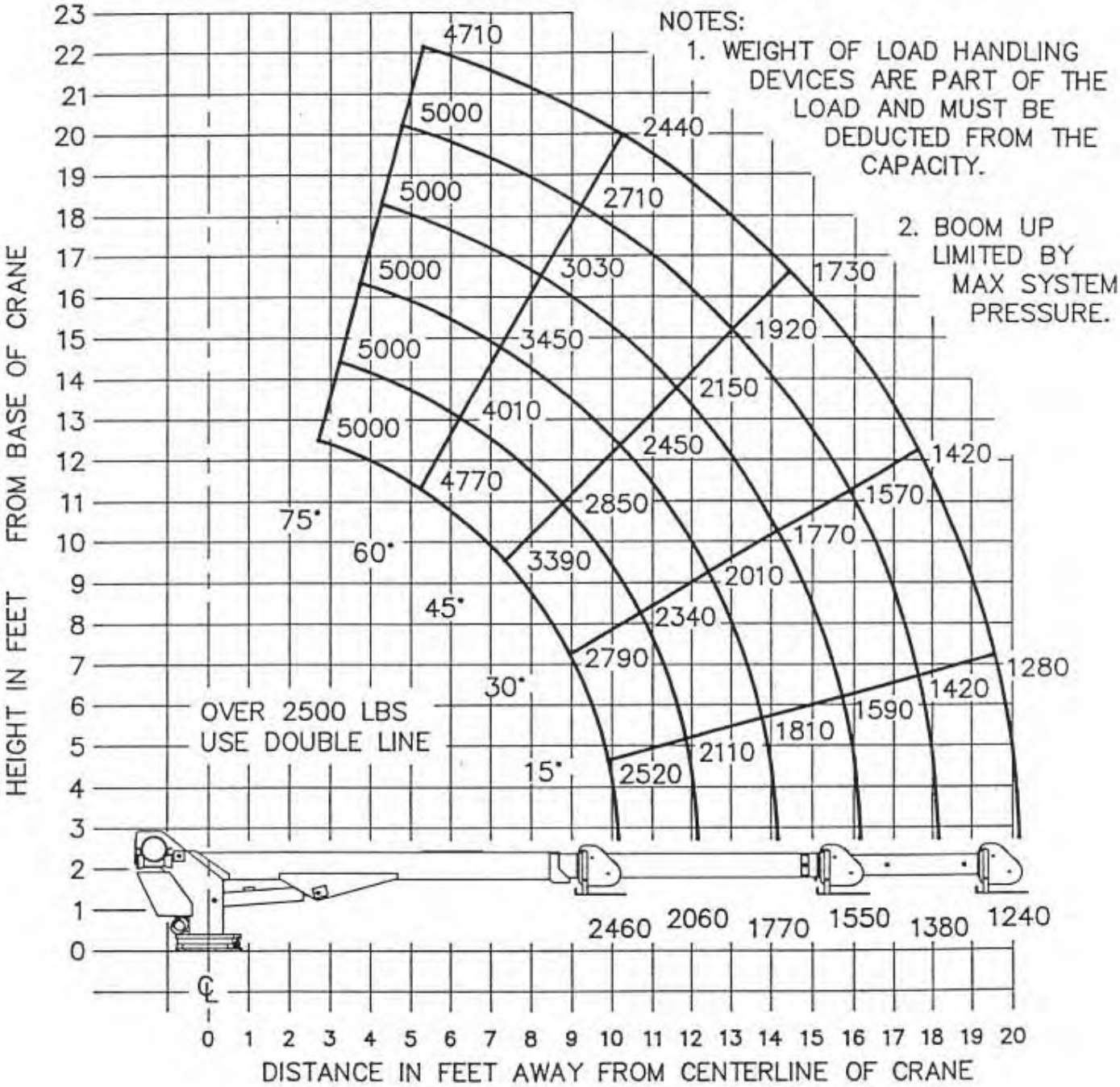

AW-360838
5005H LOAD CHART
10-16-20 BOOM

AUTO CRANE COMPANY
P.O. BOX 581510 • TULSA, OKLAHOMA 74158

Limited Warranty

Auto Crane will warranty to consumer for a period of twelve months from date of purchase that each new Auto Crane product it sells will be free under normal use and service, from defects in material and workmanship. Date of purchase will be honored as either date of purchase by distributor or his date of sale of the product as substantiated by Distributor Delivery Report.

Obligation of Auto Crane under this warranty is limited to replacement or repair of parts that appear to manufacturer after review and/ or inspection to be defective. This warranty does does not obligate Auto Crane to bear the cost of labor or transportation charges in connection with the replacement or repair of defective parts. Responsibility for customer's claims arising from misapplication, abuse, misuse or alteration of equipment or parts lies with the distributor or user and no warranty obligation is assumed in the circumstances by Auto Crane.

Auto Crane will in no event be liable for any consequential damages or contingent liabilities arising out of the failure of any Auto Crane product or parts to operate properly.

Auto Crane makes no warranty in respect to component accessories, same being subject to the warranties of their respective manufacturers.

If field service, at the request of buyer, is rendered and fault is found not to be with Auto Crane's product, the buyer shall pay the time and expense of the field representative. Claims for service labor or other expenses that have been incurred by the buyer without approval or authorization of Auto Crane will not be accepted.

AUTO CRANE COMPANY IS UNDER NO OBLIGATION TO EXTEND THIS WARRANTY TO ANY CUSTOMER FOR WHICH AN AUTO CRANE WARRANTY REGISTRATION CARD HAS NOT BEEN COMPLETED AND MAILED TO AUTO CRANE COMPANY WITHIN FIFTEEN (15) DAYS AFTER DATE OF PURCHASE.