R 4/90

EFFECTIVE SERIAL NO. - 007-DO-0190

Auto Crane Company

P.O. BOX 580697 • TULSA, OKLAHOMA 74158-0697
4707 N. MINGO ROAD • TULSA, OKLAHOMA 74117
918-836-0463 • TELEX 158108 RAMSEY TUL
SALES FAX 918-438-6688 / SERVICE FAX 918-834-5979

OWNER'S MANUAL

8005H SERIES

SERIAL NO. _____

WARNING:

FEDERAL LAW (49 CFR PART 571) REQUIRES THAT THE FINAL STAGE MANUFACTURER OF A VEHICLE CERTIFY THAT THE VEHICLE COMPLIES WITH ALL APPLICABLE FEDERAL REGULATIONS. ANY MODIFICATIONS PERFORMED ON THE VEHICLE PRIOR TO THE FINAL STAGE ARE ALSO CONSIDERED INTERMEDIATE STAGE MANUFACTURING AND MUST BE CERTIFIED AS TO COMPLIANCE. THE INSTALLER OF THIS CRANE AND BODY IS CONSIDERED ONE OF THE MANUFACTURERS OF THE VEHICLE. AS SUCH A MANUFACTURER, THE INSTALLER IS RESPONSIBLE FOR COMPLIANCE WITH ALL APPLICABLE FEDERAL AND STATE REGULATIONS, AND IS REQUIRED TO CERTIFY THAT THE VEHICLE IS IN COMPLIANCE.

IT IS THE FURTHER RESPONSIBILITY OF THE INSTALLER OF THE CRANE TO COMPLY WITH THE OSHA TRUCK CRANE STABILITY REQUIREMENTS AS SPECIFIED BY 29 CFR PART 1910.180 (C) (1).

8005H SERIES - OWNER'S MANUAL

- CONTENTS -

SECTION/PAGE

1. INTRODUCTION-8005H SERIES 1-1.0.0
2. SAFETY TIPS AND PRECAUTIONS 1-2.0.0
3. OPERATION OF UNIT/HYDRAULIC OUTRIGGERS 1-3.0.0
4. MOUNTING AND INSTALLATION 2-1.0.0
5. MAINTENANCE 3-1.0.0
6. GENERAL ASSEMBLY 4-1.0.0
7. HOIST ACTUATOR 4-6.0.0
8. AUTOMATIC SAFETY BRAKE 4-7.0.0
9. ROTATION GEAR BOX 4-8.0.0
10. ELECTRICAL SECTION 5-1.0.0
11. HYDRAULIC SECTION 6-1.0.0
12. RESERVOIR ASSEMBLY 6-6.0.0
13. OUTRIGGERS 7-2.0.0
14. LOAD CHART 8-1.0.0
15. GENERAL DIMENSIONS 8-2.0.0
16. WARRANTY ..... LAST PAGE

AUTO CRANE COMPANY

INTRODUCTION –8005H SERIES

Auto Crane products have been engineered to provide safe, trouble-free, dependable service for many years when these products are properly used and maintained.

To assist you in obtaining the best service from your crane and to avoid untimely failure of the unit and/or the vehicle on which it is mounted, the following operating and service instructions are herein published, and it is specifically recommended that all operating and service personnel consider this manual as mandatory material for reading and study before operating or servicing Auto Crane products. It is highly recommended that crane owners, equipment managers and supervisors also read this manual.

Auto Crane has incorporated several safety features in the 8005H series for your protection. The material and electrical systems were designed to minimize weight and lengthen durability. The hydraulic components are designed for a 4:1 safety factor. Holding valves are installed to prevent the load from dropping if a hose should fail. A 10u filter is installed in the hydraulic system to remove dirt and grit that may cause premature failure. The reservoir is protected iwth a 15u filter in the filter cap, and a 40 mesh strainer in the suction line.

For your convenience the overall dimensions of the 8005H series are included on the General Dimension Drawing. Rotation and turning radius are also listed. See page 8-2.0.0

Remember the crane adds weight to the vehicle and may change the driving and riding characteristics of the vehicle on which it is mounted unless this weight is properly provided for with appropriate overload springs. The payload of the vehicle is also reduced by the amount that the crane weighs, and as the vehicle is loaded, care should be exercised not to overload the vehicle. Exercising care in distributing the payload on the vehicle will greatly improve the driving and riding characteristics of the vehicle. A minimum G.V. W. of 20,500 lbs. is recommended for mounting the 8005H series cranes.

Auto Crane Company issues a limited warranty certificate with each unit sold. See last page for warranty policy.

It has always been Auto Crane Company policy to handle all warranty claims we receive as promptly as possible. If material or workmanship is involved, immediate corrective action is taken. It is therefore, understandable that Auto Crane Company cannot assume responsibility or liability when our products have obviously been abused, mis-used, overloaded or otherwise damaged by inexperienced persons trying to operate the equipment without even reading the manual. The Auto Crane is designed and built to be safe and efficient. Auto Crane will not assume responsibility or liability for any unit which has been modified, changed, or which has unauthorized or unapproved components installed.

Auto Crane maintains a strong distributor network and a knowledgeable Customer Service Department. In most cases an equipment problem can be solved through a telephone conversation with our Customer Service Department. The Customer Service Department also has the ability to bring a local distributor, a regional sales manager, or a factory serviceman into the solution of an equipment problem if necessary. If through no fault of Auto Crane Company it is necessary to send an experienced factory serviceman on a field service call, the rates stated in the Auto Crane, Distributor's Flat Rate Manual will apply.

Auto Crane Company's extensive Research and Development Program assures our customers of the best equipment on the market, and our Engineering Staff, as well as our knowledgeable sales people are always available to our customers in solving crane and winch-type application problems. When in doubt-call the the Auto Crane factory.

DISTRIBUTOR ASSISTANCE:

Should you require any assistance not given in this manual, we recommend that you consult your nearest Auto Crane Distributor. Our distributors are stocked with authorized parts and a service department that can solve almost any needed repair.

NOTE: THIS MANUAL SHOULD REMAIN WITH THE CRANE AT ALL TIMES.

The material herein does not imply to cover all maintenance, instructions, operations, or variations pertinent to every possible situation. If additional information is required, please refer to the Auto Crane Company at the following telephone number: 918 - 438-2760. The information contained in the manual was in effect at the time of printing. Auto Crane Company reserves the right to update this material at any time without prior notice or obligation.

-IMPORTANT-

SAFETY TIPS AND PRECAUTIONS

1. Make certain the vehicle meets minimum chassis requirements. (These requirements do not guarantee unit stability.)
2. Make certain the crane is installed per factory specifications. Contact your local Distributor or the Auto Crane factory if any questions arise.
3. Keep the vehicle in as level a position as possible while loading or unloading.
4. **ALWAYS** set the vehicle emergency brake before beginning crane operations
5. **ALWAYS** use outriggers from vehicle to the ground during crane operation. Insure that they are firmly positioned on solid footings.
6. All load ratings are based on crane capacity, NOT unit stability.
7. **ALWAYS** comply with load chart capacities (centerline of rotation to hoist hook).
8. **NEVER OPERATE THE CRANE NEAR ELECTRICAL POWER LINES.** Auto Crane Company recommends that a crane never be moved any closer to a power line (including telephone lines) than 20 feet at any point.
9. Keep objects and personnel clear of crane path during operation.
10. Keep hoist cable pulled tight at all times.
11. **WARNING** NEVER un-reel last wrap of cable from drum.
12. **WARNING** NEVER wrap cable around load.
13. **REMEMBER** - in lifting a heavy load, the weight can create enough tipping moment to overturn the vehicle.
14. **WARNING** NEVER attempt to lift or drag a load from the side- the boom can fail far below its rated capacity.
15. Oil gears as required.
16. Periodic adjustment of hoist worm brake my be required (see automatic safety brake drawing, page 4-7.0.0).
17. Hydraulic hoses need to be inspected frequently for signs of deterioration, and be replaced as required.
18. **WARNING** NEVER weld, modify, or use unauthorized components on any Auto Crane unit. This will void any warranty or liability. Also failure of the crane may result.
19. An important item which an operator should consider and use properly is the hoist hook. It should be checked on a 30-day basis for distortion or cracks.
20. **WARNING** NEVER place a chain link on the tip of the hook and try to lift a load with the hoist.
21. **WARNING** NEVER use a sling bar or anything larger than the hook throat which could prevent the safety latch from closing, thus negating the safety feature.
22. **WARNING** In using a safety hook, **ALWAYS** insure that the hook throat is closed before lifting a load. Proper attention and common sense applied to the use of the hoist hook and various slings will prevent possible damage to material being hoisted and may prevent injury to personnel.
23. **WARNING** NEVER hold any pendant Select switch on that will negate safe operating conditions.
24. **ALWAYS** store outriggers before road travel.

NOTE:

Auto Crane Company remote controlled, stiff boom cranes are not designed or intended to be used for any applications involving the lifting or moving of personnel.

OPERATION OF UNIT

1. Make sure this manual has been thoroughly read by all crane operating personnel.

2. A routine inspection of the crane should be mandatory before each operating day. Any defects should be corrected immediatly.

3. At a job site the vehicle should be positioned so that the crane can adequately reach the load within the rated capacity (centerline of rotation to hoist hook).

4. Keep the vehicle as level as possible during operation.

5. Engage emergency brake and turn ignition off with transmission left in gear or in park (for automatic transmissions). This is for Auto Crane units requiring only battery operation, For larger Auto Crane units requiring battery and hydraulic operation, engage emergency brake and place gear select in neutral; press clutch and pull PTO knob in gear; release clutch and set throttle control to proper engine speed. WARNING: DO NOT EXCEED ENGINE SPEED NECESSARY TO MEET PUMP RPM REQUIREMENT - (see hydraulic section) POSSIBLE DAMAGE MAY RESULT.

6. Always use outriggers from the truck to the ground. Be sure these are firm and adequately positioned.

7. Then remove pendant control from cab (on smaller units) and plug into receptacle on crane. Crane is now ready for operation. On Auto Crane's larger units, remove pendant control from guard and unwrap cable from boom. Crane is now ready for operation.

8. Always boom up before rotating so that the boom will clear the required boom support.

9. When extending the boom always maintain clearance between the boom crown and the traveling block or hoist hook.

10. Always observe safe and practical operation to avoid possible accidents. Refer to Safety Tips and Precautions.

11. After completing lifting operations, return the boom to stowed position on the boom support. Avoid unneeded pressure on the boom support.

12. Store pendant control on proper location (in cab or on crane).

13. Return outriggers to stowed position. Make sure they are pinned in place or jacklegs are returned to compartment.

14. Check work area for any tools or equipment not stored.

15. Press clutch and disengage PTO. Release throttle control and emergency brake.

16. Report any unusual occurance during crane operation that may indicate required maintenance or repair.

OPERATION OF HYDRAULIC OUTRIGGERS

1. Prior to operating outriggers, detach crane hook from dead man.

2. Shift crane - outrigger selector valve to "outrigger" position.

3. While operating the outrigger control valves (located on the outrigger cylinders), simultaneously operate the boom-up control switch. This will allow hydraulic system to build pressure.

4. After outriggers are positioned, return crane-outrigger selector valve to "crane" position. Crane is now ready to operate.

3/89

MOUNTING AND INSTALLATION 8005H

1. CHECK TO MAKE SURE THE FOLLOWING ITEMS ARE WITH YOUR CRANE:

ITEM	PART NO.	DESCRIPTION
1.	360603	SWIVEL BLOCK
2.	480157	VENTED RELIEF VALVE
3.	480022	PUMP ASSEMBLY (OPTIONAL)
4.	999939	OWNER'S MANUAL
5.	015104	BOLT-7/8NFx5", GRD 5, (4 REQD)

2. **PRESSURE AND RETURN HOSES ARE NOT FURNISHED WITH THIS CRANE. THE HOSES MUST BE PROVIDED BY THE INSTALLER AND THE LENGTHS DETERMINED AT INSTALLATION.**

REQUIREMENTS FOR INSTALLATION USING 8 GALLON RESERVOIR W/INTEGRAL RELIEF VALVE & AUTO CRANE PROVIDED PUMP
(REF. DWG AW-017, PG 2-2.0.0 & AW-480150, PG 6-6.0.0)

A) RETURN LINE FROM CRANE TO RESERVOIR.
HOSE - SIZE (-8 SAE100 R2 OR EQUIVALENT) LENGTH TO BE DETERMINED BY INSTALLER. RETURN LINES LONGER THAN 6 FT SHOULD BE -12 DIAMETER.
HOSE END FITTINGS TO BE (-8, 37° SAE FLARE FEMALE SWIVEL-CRANE END) & (-10, 37° SAE FLARE FEMALE SWIVEL-RESERVOIR END).

B) PRESSURE LINE FROM VENTED RELIEF VALVE TO CRANE.
HOSE - SIZE (-8 SAE 100 R2 TYPE) AT DESIRED LENGTH.
FITTINGS - TWO (-8, 37° SAE FLARE FEMALE SWIVEL FITTINGS). NOTE: CRANE MUST USE RELIEF VALVE P/N 480157 WHICH IS PROVIDED

C) SUCTION HOSE FROM PUMP TO RESERVOIR.
HOSE - SIZE (-16) FOUR HOSE CLAMPS (-16) (TWO EACH END).

D) PRESSURE LINE FROM PUMP TO VENTED RELIEF VALVE. (LOCATED ON RESERVOIR).
HOSE - SIZE (-12) (SAE 100R2) AT DESIRED LENGTH.
FITTINGS - TWO (-10, 37° SAE FLARE FEMALE SWIVEL FITTINGS).

NOTE:
REFER TO OWNERS MANUAL FOR ADDITIONAL INSTALLATION INFORMATION, AND OTHER RESERVOIR AND PUMP COMBINATIONS.

3. CRANE MUST BE PROVIDED WITH A FLOW OF 8 GALLONS PER MINUTE. EXCESS FLOW WILL CAUSE ERRATIC OPERATION, AND TOO LITTLE FLOW WILL CAUSE POOR CRANE OPERATION.

4. MAKE SURE MOUNTING SURFACE IS PROPERLY REINFORCED TO WITHSTAND 50,000 FT-LB CAPACITY LOADING OF CRANE AND THAT OUTRIGGERS ARE USED TO PROVIDE TOTAL STABILITY FOR THE TRUCK.

5. MAKE SURE THE MOUNTING BOLTS ARE P/N 015104 (7/8x5, GR.5) AND ARE TORQUED TO 440 FT-LBS (DRY).

6. WHEN CRANE IS NOT IN OPERATION, A BOOM SUPPORT SHOULD ALWAYS BE USED. TRAVELING BLOCK SHOULD BE CONNECTED TO HOOK LOOP. SEE ILLUSTRATION DRAWING AW-017, PAGE 2-2.0.0

7. ALWAYS USE CABLE LOOPS ON BOOM AND PENDANT GUARD TO STORE PENDANT ASSEMBLY.

8. IT IS STRONGLY RECOMMENDED THE VEHICLE BE EQUIPPED WITH AN ENGINE SPEED CONTROL AND TACHOMETER.

9. CHECK FOR PROPER PRESSURE AND RETURN LINE HOOK-UP TO CRANE: PRESSURE PORT IS ON RIGHT SIDE OF CRANE AS VIEWED FROM THE REAR (REF. OWNER'S MANUAL DRAWING AW-017, PG 2-2.0.0).

10. ELECTRICAL HOOK UP - RUN THE FOLLOWING WIRES THROUGH HOLE IN BASE ASSEMBLY OF CRANE AND SEAL WITH SILICONE RUBBERTO PREVENT WIRE CHAFING AND LEAKS.

A) CONNECT WIRE FROM DIRECTIONAL VALVE SOLENOID (P/N 480137 REF. AW-480157, PG 6-7.0.0), TO WHITE WIRE W/ TRACER AT PENDANT CABLE END (REF. AW-480093, PG 5-8.0.0)

B) CONNECT POWER CONDUCTOR FROM STARTER SOLENOID TO BLACK WIRE AT BASE OF CRANE. USE IN-LINE FUSE PROVIDED. (REFERENCE DRAWINGS AW-480095, ITEM 2, PG 5-1.0.0)

WARNING-FAILURE TO CORRECTLY PLUMB AND WIRE CRANE CAN CAUSE INADVERTANT OPERATION AND CRANE DAMAGE.

11. ONCE CRANE AND PLUMBING ARE INSTALLED ON THE TRUCK, FILL THE RESERVOIR TO TOP OF SIGHT GLASS, (USE MOBIL DTE-13 HYDRAULIC OIL, OR EQUAL). BEFORE OPERATING CRANE CONNECT PRESSURE AND RETURN HOSES GOING TO BASE OF CRANE TOGETHER USING -8 FLARE FITTING AND ENGAGE PTO WITH ENGINE RUNNING. ALLOW OIL TO CIRCULATE FOR 15 TO 20 MINUTES. THIS WILL FLUSH CONTAMINANTS FROM THE SYSTEM BACK TO THE RETURN LINE FILTER. **CAUTION - FAILURE TO USE CLEAN HYDRAULIC HOSES AND COMPONENTS MAY CONTAMINATE THE CRANE AND HYDRAULIC SYSTEM AND VOID WARRANTY**. OPERATE ALL CYLINDERS TO FULL EXTENSION AND RETRACTION A MINIMUM OF SIX TIMES, TO BLEED AIR FROM SYSTEM. RETURN ALL CYLINDERS TO THE STORED POSITION AND DISENGAGE PTO. REFILL RESERVOIR TO TOP SIGHT GLASS. TO ENSURE PROPER FLOW (8 GPM) INSTALL AN IN-LINE FLOW METER BETWEEN THE CRANE AND THE RESERVOIR IN THE RETURN HOSE, OR CONFIRM PUMP (PN 480022) SPEED IS 1000 RPM. IF PUMP P/N 360030 IS SUBSTITUTED CORRECT PUMP SPEED IS 1265 RPM. (APPROXIMATE FLOW CAN ALSO BE DETERMINED BY CHECKING BOOM-UP SPEED FROM -30° TO 75° IN 22-24 SECONDS.)

12. PROPER PRESSURE SETTING CAN BE ACHIEVED BY REMOVING THE PIPE PLUG (PN 000209, OF VENTED RELIEF VALVE ASSEMBLY, DWG 480157) AND INSTALLING A 2500 PSI PRESSURE GAUGE. THE BOOM CAN NOW BE ELEVATED TO 75 DEGREES (FULL CYLINDER EXTENSION) AND THE PRESSURE ON THE GAUGE NOTED. IF THE GAUGE READING IS NOT 2000 PSI, ADJUST THE VENTED RELIEF VALVE (PN 480135), (SEE VENTED RELIEF VALVE ASSEMBLY, DWG 480157, ALSO SEE RESERVOIR ASSEMBLY AW-480150), UNTIL THE CORRECT PRESSURE IS REGISTERED. VERIFY THIS SETTING BY BOOMING DOWN TO 60°, THEN BOOMING UP TO FULL ELEVATION AND CHECK THE PRESSURE FOR 2000 PSI. REMOVE GAUGE AND RE-INSTALL THE PIPE PLUG.

13. LOAD TEST THE CRANE TO ENSURE PROPER FUNCTIONING AND TRUCK STABILITY.

14. MAKE CERTAIN THE OWNER'S MANUAL IS DELIVERED TO THE CUSTOMER.

15. FOR ADDITIONAL HELP: CALL THE SERVICE DEPARTMENT AT THE AUTO CRANE COMPANY, (918 836-0463)

WARNING

FEDERAL LAW (49 CFR PART 571) REQUIRES THAT THE FINAL STAGE MANUFACTURER OF A VEHICLE CERTIFY THAT THE VEHICLE COMPLIES WITH ALL APPLICABLE FEDERAL REGULATIONS. ANY MODIFICATIONS PERFORMED ON THE VEHICLE PRIOR TO THE FINAL STAGE ARE ALSO CONSIDERED INTERMEDIATE STAGE MANUFACTURING AND MUST BE CERTIFIED AS TO COMPLIANCE. THE INSTALLER OF THIS CRANE AND BODY IS CONSIDERED ONE OF THE MANUFACTURERS OF THE VEHICLE. AS SUCH A MANUFACTURER, THE INSTALLER IS RESPONSIBLE FOR COMPLIANCE WITH ALL APPLICABLE FEDERAL AND STATE REGULATIONS, AND IS REQUIRED TO CERTIFY THAT THE VEHICLE IS IN COMPLIANCE.

IT IS THE FURTHER RESPONSIBILITY OF THE INSTALLER OF THE CRANE TO COMPLY WITH THE OSHA TRUCK CRANE STABILITY REQUIREMENTS AS SPECIFIED BY 29 CFR PART 1910.180 (C) (1).

HYDRAULICS - 8005H

COUNTERBALANCE VALVE ADJUSTMENT

REF. SEE HYDRAULIC ASSEMBLY AW-016 - PAGE 6-1.0.0

1. With PTO disengaged and boom properly supported, remove pipe plug (Item 21, P/N 000209) shown on Boom-Up Illustration. Install a pressure gauge (0-2500 psi) into tee (Item 20, P/N 480193).

2. Engage PTO (Requirements: Pump speed setting 1000 R.P.M., G.P.M., 2000 psi to crane). With no load on boom, boom-up to 75° (Boom-up cylinder fully extended). Activate Boom-down and note pressure reading. If pressure reading is not approximately 1000 psi, the counterbalance valve requires adjustment.

   A. To increase the counterbalance setting turn the adjustment screw counter-clockwise)Location: Front of Item 1, P/N 480187 - Counterbalance Valve; curb side with boom toward cab. Adjustment: Loosen nut and adjust allen head set screw).

   B. To reduce the counterbalance setting, turn the adjustment screw clockwise.

3. Tighten nut on adjustment screw and repeat procedure if needed to obtain the proper pressure setting.

Disengage PTO, remove the pressure gauge and install pipe plug. Crane is now ready for operation.

NOTE:

In an emergency situation when it becomes necessary to lower the boom without flow present, the counterbalance adjustment can be turned clockwise until the boom begins to descend.

VENTED RELIEF VALVE SETTING

1. The crane must receive 8 GPM and 2000 psi. To assure proper flow, install an in-line flow meter between the crane and the reservoir in the return hose, or confirm pump (480018) speed at 1000 R.P.M. Proper pressure setting for units without proportional control can be achieved by removing the pipe plug (P/N 000209, of Relief Valve Assembly 480157) and installing a 2500 psi pressure gauge. This should be done with the boom up cylinder fully retracted.

2. The boom can now be elevated to 75° (full extension) and the pressure on the gauge noted. If the gauge is not 2000 psi, adjust the vented relief valve (P/N 480135) until the correct pressure is registered. Verify this setting by booming down to 60°, then booming up to full cylinder extension and the pressure checked for 2000 psi.

3. Disengage PTO. Remove gauge and re-install the pipe plug. Crane is now ready for operation.

8005H SERIES HYDRAULICS TROUBLESHOOTING

CAUTION: Never check for hydraulic leaks by feeling around hoses, fittings, or any other components. High pressrure oil can be injected through the skin causing severe injury, or death.

The hydraulic system of the 8005H power version is electrically operated and requires a minimum of 12V for satisfactory performance. The hydraulic pump is bi-rotational with a pressure relief s'ttting of 2000 p.s.i. (REF.). Standard pump speed is 1000 R.P.M. (Ref. Pump P/N 480018). This pump is for direct flange mounting only, not to be shaft driven.

PROBLEM	SOLUTION
FLOW PRESENT BUT FUNCTION WILL NOT WORK	Remove valve cover (P/N 480160, Item 7, Page 4-1.0.0 to gain access to the manual override on the end of the valve cartridge (Ref. AW-480184). If the pump is operating, and pushing the manual override in does not operate the selected function, check pump pressure. If the function does operate, check for loose wire, low voltage or bad ground. If the above items check out all right, replace valve cartridge. If the problem is traced to no voltage at the valve cartridge, remove pendant and with the switch engaged check for an open circuit with an ohmeter. If the circuit is open, check for broken wiring or bad switch.
HYDRAULIC "CHATTER"	When a hydraulic function is engaged and causes the crane to "chatter," check for loose wire, low voltage at valve cartridge, low pump pressure, or air in the system.
NO FLOW OR LIM!TED FLOW TO CRANE	Check for adequate oil supply in reservoir. Check operation of vented relief valve by pressing manual over-ride on solenoid of relief valve while operating crane. If crane functions, check for 12V at solenoid when operating crane. If voltage present-check solenoid on relief for continuity and ground. If low flow condition continues to exist when relief valve vent manual over ride is operated, remove relief valve cartridge and check for dirt. Other possible causes for a low flow condition are: 1. Engine speed too slow. 2. Blocked pressure hose from pump. This condition can be identified by excessive lugging of engine and rapid overheating of oil. 3. Collapsed or blocked suction hose to pump. This condition is usually identified by pump cavitation noise. 4. Bad pumps - a bad pump will usually have some flow but the flow will drop off rapidly as pressure increases. This condition will cause orerheating of the system.

Prgressively disconnect fittings at test points to verify existence of flow. Rule: Pumps pump flow only; systems and their loads-resistances produce pressure, up to that limit imposed by lowest pressure limiting exposed to pressure.

NO PRESSURE OR TOO LOW PRESSURE	Check to maintain adequate oil in reservoir (approx. 8 gal.) by means of sight gauge. Make sure pressure gauge is functioning correctly. Possible relief hung open. Check for excessive leakage and correct. Check to insure that pressure limit switch is correctly set.

Progressively test circuit points to determine pressure existence.

TOO HIGH FLOW	Make sure pump size is correct and pump speed is not too fast (1000 R.P.M.). Check or replace flow control. Check components for flow displacements.
TOO HIGH PRESSURE	Make sure pressure relief valve is correctly set.

CAUTION

The Auto Crane 8005H Series cranes are manufactured with a standard overload protection system to prevent structrual damage to the crane. When the crane load rating is exceeded, main boom down, extend out, and hoist up will not function. These operations cannot be used again until the load on the crane is reduced. Also, the main boom elevation will be limited in its operation as the crane becomes overloaded. Attempting to raise the main boom with a load exceeding the crane rating will open the main relief valve resulting in no boom movement. This problem can be resolved by moving the

FIXTURE NO	FINISH NO

CHG LTR	REVISIONS DESCRIPTION	DATE	APP'D

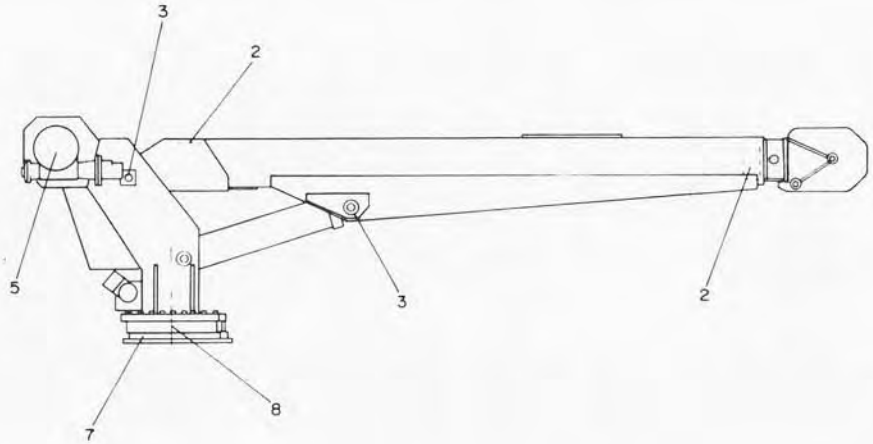

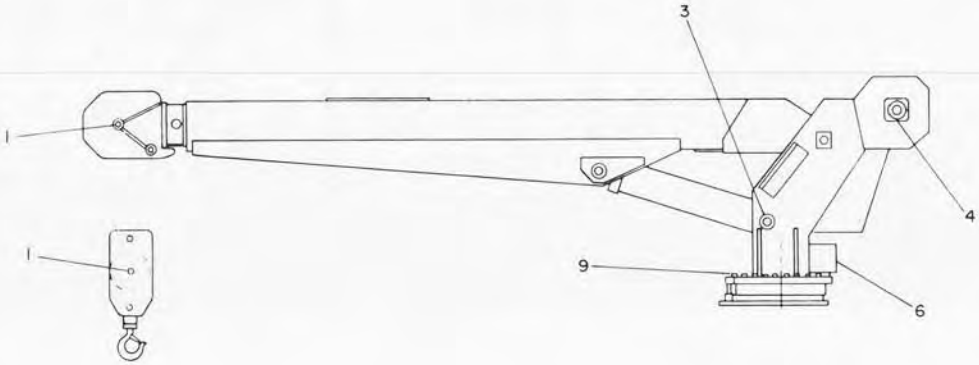

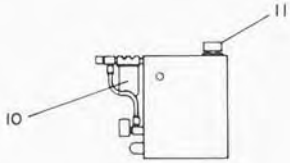

RESERVOIR

1. SHEAVE ROLLER BEARINGS: SEALED TYPE. NO LUBE REQUIRED.
2. BOOM PADS: IF REPLACED, GREASE UPON INSTALLATION USE CHASSIS LUBRICANT.
3. GREASE ZERK: PIVOT POINTS, LUBE ONCE A WEEK. USE MOBILPLEX EP-2 OR EQUIVALENT.
   (CYLINDER CROSSTUBE @ BOOM)
   (CYLINDER CROSSTUBE @ PEDESTAL)
   (BOOM PIVOT)
4. HOIST ROLLER BEARINGS: SEALED TYPE. NO LUBE REQUIRED.
5. HOIST ACTUATOR: MAINTAIN LUBE AT PLUG. USE EXTREME PRESSURE GEAR LUBE (E.P. 80-90). SPUR GEAR TO USE 30 WT. OIL. REPLACE LUBE EVERY SIX MONTHS.
6. ROTATION GEAR BOX: REQUIRES 1-3/4 PINT OF EPO-140. REPLACE EVERY SIX MONTHS.
7. RING GEAR: LUBE EVERY 3 MONTHS AT PINION' USE MOBILTAC LL OR EQUIVALENT.
8. RING GEAR RACE: LUBE EVERY 3 MONTHS AT ZERK. USE MOBILPLEX EP-2 OR EQUIVALENT.
9. BOLTS: RING GEAR - PEDESTAL BASE. REQUIRED TORQUE OF BOLTS IF REPLACED - 150#LBS. HARDENED WASHERS REQUIRED.
   NOTE: BOLTS SHOULD BE CHECKED PERIODICALLY AND RETIGHTENED TO PROPER TORQUE. THE POSSIBILITY EXISTS THAT DUE TO THE STRESSES APPLIED TO THE ROTATION SYSTEM, THE BOLTS COULD WORK LOOSE.
10. RESERVOIR FILTER: 10 MICRON SPIN ON FILTER REQUIRED. REPLACE EVERY 3 MONTHS.
11. HYDRAULIC FLUID: USE DTE-13 OR EQUAL TO KEEP LEVEL AT SIGHT GAUGE. RESERVOIR SHOULD BE FLUSHED AND NEW FLUID ADDED EVERY 2 YEARS OR IF A HYDRAULIC FAILURE OCCURS.

QUANTITY	ITEM	D S	PART NO	DESCRIPTION

LIST OF MATERIAL

UNLESS OTHERWISE NOTED ALL DIMENSIONS ARE IN INCHES. TOLERANCES UNLESS OTHERWISE SPECIFIED
ANGLES ± 1/2° | XX ± .40
FRACTIONAL ± 1/16 | XXX ± .010
REMOVE ALL BURRS AND SHARP EDGES. DO NOT SCALE THIS DRAWING.
TOLERANCES NOT SHOWN ABOVE ARE PER ANSI Y14.5, 1973.

THIS PRINT IS THE PROPERTY OF AUTO CRANE CO AND MUST NOT BE USED IN ANY MANNER DETRIMENTAL TO THEIR INTERESTS

NEXT ASS'Y

DRAWN BY Armstrong
DATE 9-5-84
CHK'D BY
DATE
ENG BY
DATE

AUTO CRANE COMPANY

TITLE
LUBRICATION - MAINTENANCE
8005H

SCALE	SIZE	DRAWING NO	REVISION
~	C	AW-015	

WEIGHT

SHEET 1 OF 1

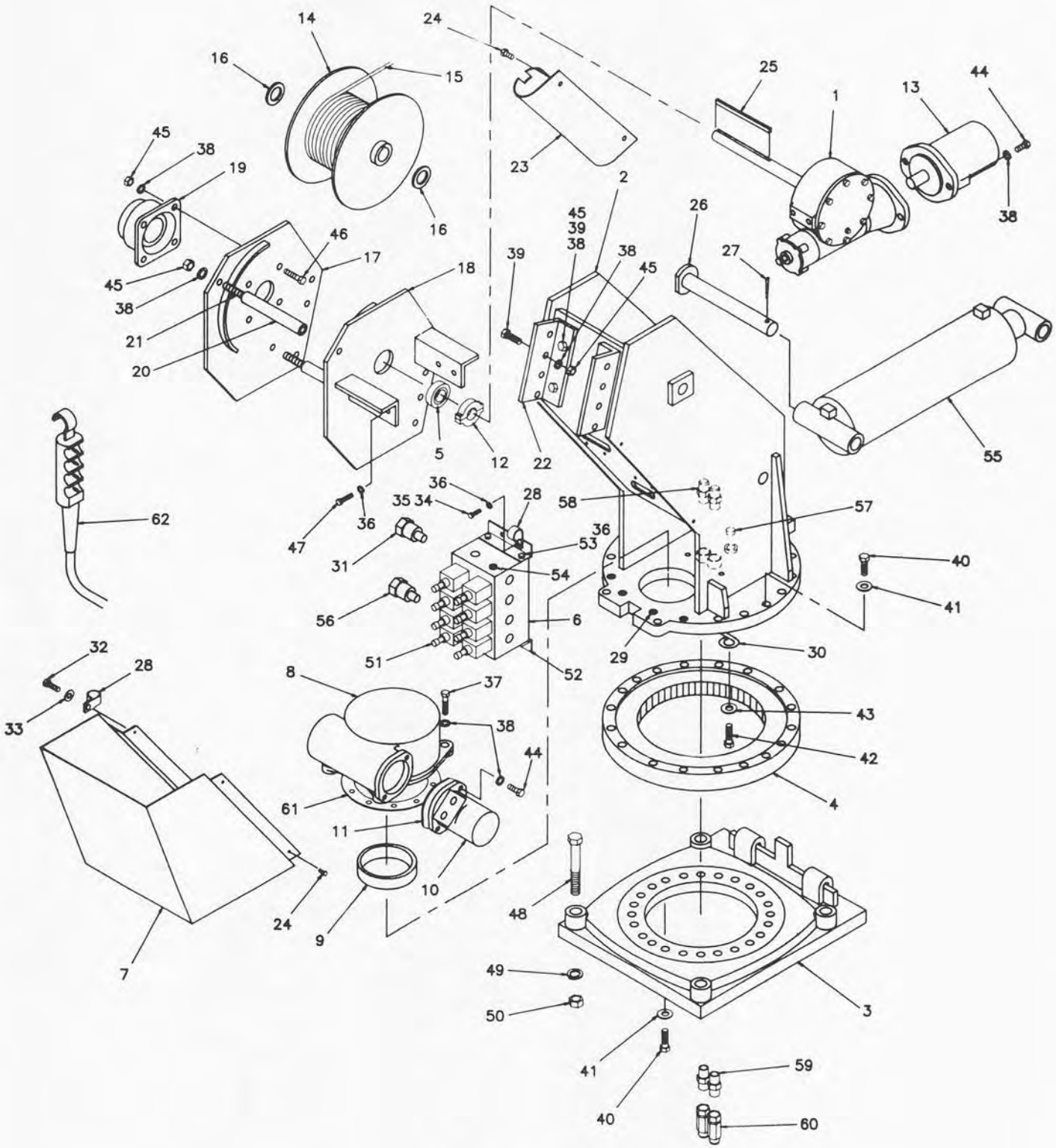

AW-480000
PEDESTAL ASSEMBLY, 8005H
NONREMOVABLE PENDANT

PEDESTAL ASSEMBLY 8005H - AW-480000

ITEM	QTY.	PART NO.	DESCRIPTION
1	1	480075	ACTUATOR, HOIST
2	1	480050	PEDESTAL WELDMENT ASS'Y
3	1	480040	BASE PLATE ASSEMBLY
4	1	480023	BEARING, ROTATION
5	1	400500	BEARING
6	1	480313	MANIFOLD, BLOCK
7	1	480160	COVER, VALVE
8	1	480028	GEAR BOX, ROTATION
9	1	360162	RING, ECCENTRIC
10	1	480027	MOTOR, HYD. (ROTATION)
11	1	480019	GASKET, MOTOR
12	1	330468	COLLAR, SPLIT LOCK
13	1	480076	MOTOR, HYD. (HOIST)
14	1	480066	DRUM, HOIST
15	1	480031	CABLE ASSEMBLY (3/8")
16	2	480073	SPACER, WINCH SHAFT
17	1	480064	SIDE PLATE - LEFT
18	1	480062	SIDE PLATE - RIGHT
19	1	480077	BEARING, 4-BOLT
20	2	480069	SPACER, TUBE
21	2	480070	ROD, SPACER
22	2	480072	BRACKET, MOUNTING
23	1	634000	GUARD, PENDANT
24	5	002615	SCREW, 1/4-20 X 3/8 S.T.
25	1	480094	KEY, SQ. 3/8
26	1	480127	PIN, PEDESTAL / CYLINDER
27	1	360123	PIN, SPRING
28	2	480024	MOUNT, PENDANT RETAINER
29	4	006205	SCREW, SC. HD. 5/8 NC X 1-1/4 G5
30	1	360207	RETAINER, ECCENTRIC RING
31	1	480183	CARTRIDGE, FLOW REGULATOR (480183-001, SEAL KIT)
32	1	002608	SCREW HX. HD. 1/4-20 X 3/4" S.T.
33	1	020901	WASHER, FLAT SAE 5/16"
34	4	008701	SCREW, HX. HD. 3/8 NC X 1" LG.
35	4	017100	NUT, HX. 3/8 NC CP
36	8	021100	WASHER, SP. LK. 3/8 CP
37	4	011608	SCREW, HX. HD. 1/2 NC X 2" LG. G5
38	28	021500	WASHER, SP. LK. 1/2 CP
39	12	010201	BOLT, HX. 1/2 NC X 1-1/2" LG. G5
40	38	012198	SCREW, HX. HD. 5/8 NC X 1-3/4" LG. G8
41	38	023902	WASHER, FL. 5/8 HARDENED
42	1	007402	SCREW, HX. HD. 5/16 NC X 5/8" LG. G5
43	5	020600	WASHER, SP. LK. 5/16
44	4	012197	SCREW, SC. HD. 1/2 NC X 1-1/2" G5
45	20	017701	NUT, HX. 1/2 NC CP
46	4	011605	SCREW, HX. HD. 1/2 NC X 1-3/4" G5
47	4	008601	SCREW, HX. HD. 3/8 NC X 7/8" G5
48	4	015104	SCREW, HX. HD. 7/8 NF X 5" G5
49	4	022200	WASHER, SP. LK. 7/8
50	4	018900	NUT, HX. 7/8 NF
51	8	480184	VALVE, CARTRIDGE
52	2	REF	BRACKET, MANIFOLD
53	4	REF	SCREW, HX. HD. 3/8 NC X 3/4" LG.
54	1	000109	PLUG, PIPE 3/8

FIXTURE NO.	FINISH NO.

CHG LTR	REVISIONS DESCRIPTION	DATE	APP'D

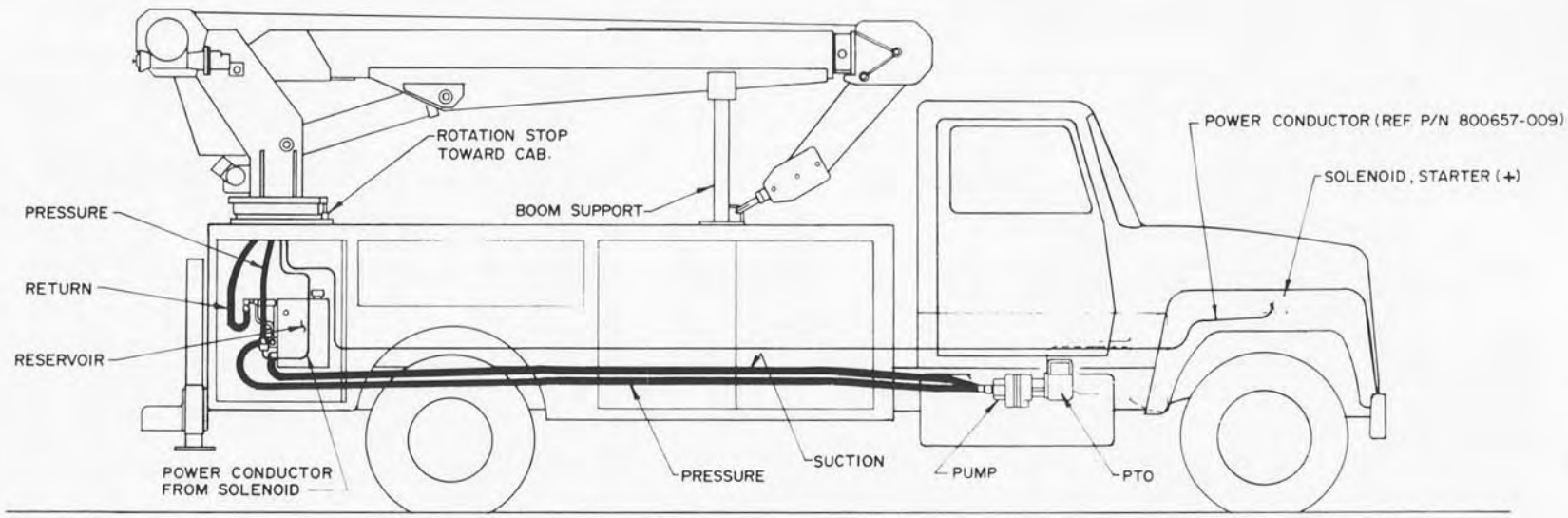

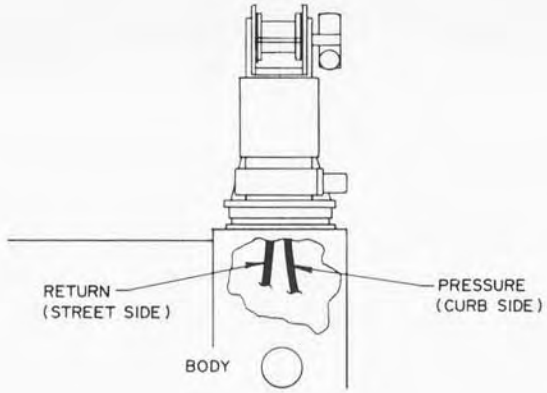

REAR VIEW
BOOM TOWARD CAB

ITEM	D S	PART NO.	DESCRIPTION
QUANTITY		LIST OF MATERIAL	

UNLESS OTHERWISE NOTED ALL DIMENSIONS ARE IN INCHES. TOLERANCES UNLESS OTHERWISE SPECIFIED
ANGLES ± 1/2° | XX ± .40
FRACTIONAL ± 1/16 | XXX ± .010
REMOVE ALL BURRS AND SHARP EDGES. DO NOT SCALE THIS DRAWING
TOLERANCES NOT SHOWN ABOVE ARE PER ANSI Y14.5 1973

THIS PRINT IS THE PROPERTY OF AUTO CRANE CO AND MUST NOT BE USED IN ANY MANNER DETRIMENTAL TO THEIR INTERESTS

NEXT ASS'Y

DRAWN BY Armstrong
DATE 9-6-84
CHK'D BY
DATE
ENG BY
DATE

AUTO CRANE COMPANY

TITLE
ORIENTATION, MOUNTING - 8005H

SCALE	SIZE	DRAWING NO	REVISION
~	C	AW-017	

WEIGHT

SHEET 1 OF 1

2-2.0.0

FIXTURE NO.	FINISH NO.

CHG LTR	REVISIONS DESCRIPTION	DATE	APP'D

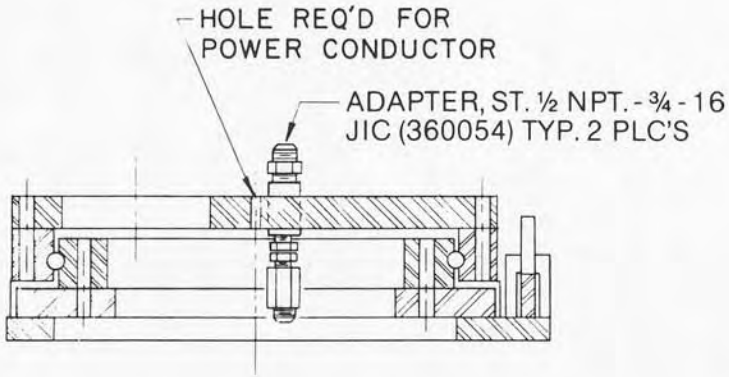

SECTION A-A

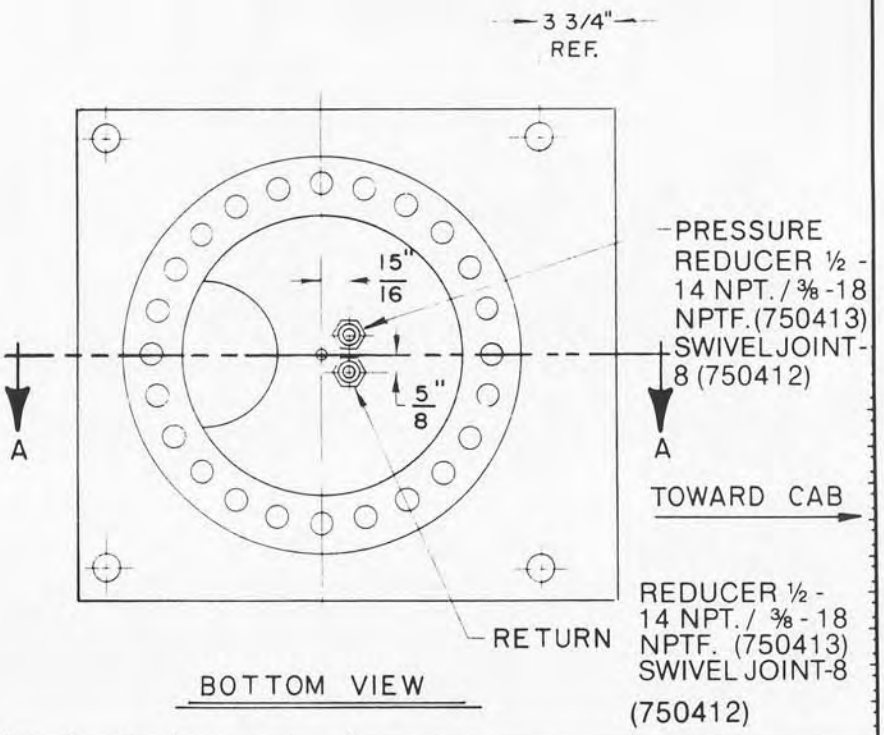

BOTTOM VIEW

ITEM	QTY	D/S	PART NO.	DESCRIPTION

LIST OF MATERIAL

UNLESS OTHERWISE NOTED ALL DIMENSIONS ARE IN INCHES.
TOLERANCES UNLESS OTHERWISE SPECIFIED.
ANGLES ± 1/2° | .XX ± .040
FRACTIONAL ± 1/16 | .XXX ± .010
REMOVE ALL BURRS AND SHARP EDGES. DO NOT SCALE THIS DRAWING.
TOLERANCES NOT SHOWN ABOVE ARE PER ANSI Y14.5-1973

THIS PRINT IS THE PROPERTY OF AUTO CRANE CO. AND MUST NOT BE USED IN ANY MANNER DETRIMENTAL TO THEIR INTERESTS.

DRAWN BY R. TAY
DATE 6-17-86
CHK'D BY
DATE
ENG. BY
DATE

AUTO CRANE COMPANY

TITLE
BASE ASSEMBLY - 8005H

SCALE ~ | SIZE B | DRAWING NO. AW - 019 | REVISION ~

WEIGHT | SHEET 1 OF 1

12/86 | NEXT ASS'Y

81253

AUTO CRANE'S SUGGESTED BOOM SUPPORT

LEAVE 3/4" CLEARANCE ON EACH SIDE OF BOOM

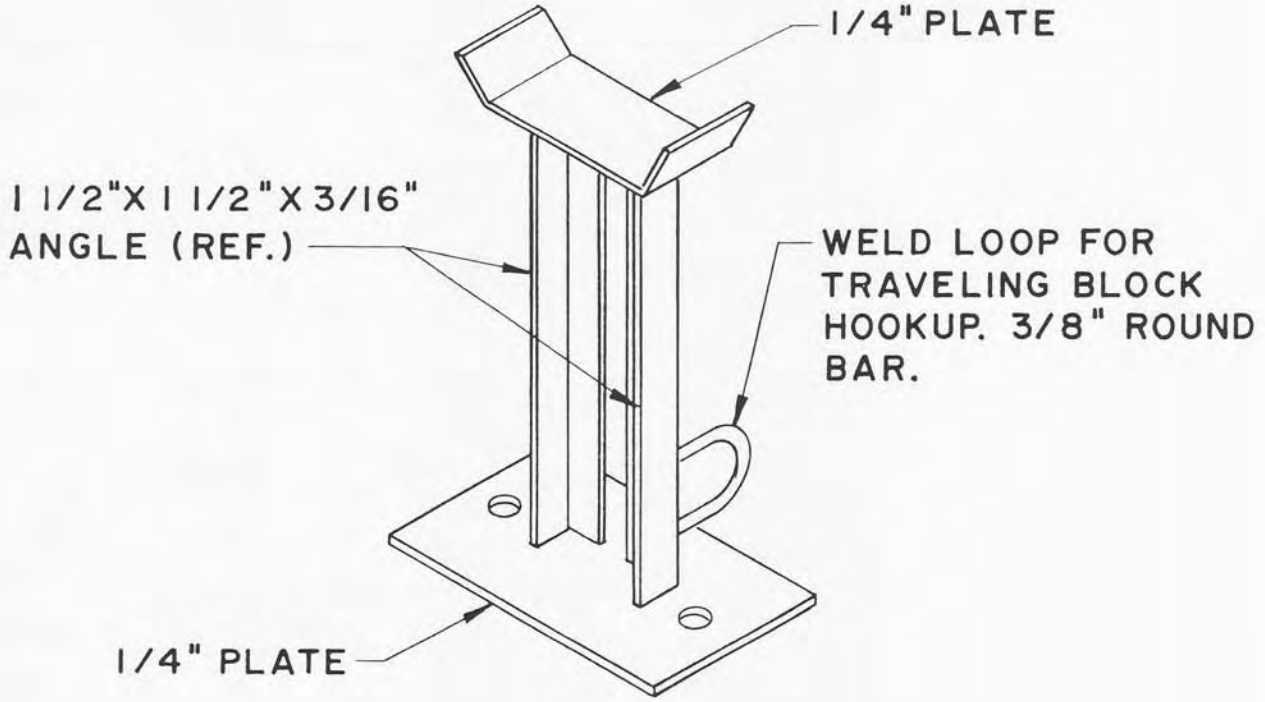

BOOM SUPPORT IS REQUIRED.

AUTO CRANE COMPANY
P.O. BOX 580697 TULSA OKLAHOMA 74158-0697
4707 N. MINGO ROAD 918-836-0463

WIRE LINE LUBRICATION

Lubrication of the wire line serves two important purposes: (1) helps to prevent corrosion; (2) lubricates the cable strands to reduce wear due to flexing and abrasion caused by contact with the sheaves, rollers and cable on the drum.

PREPARATION:

Remove rust and foreign matter with a wire brush and wipe clean. Be sure cable is dry.

APPLICATION:

Two methods are illustrated in figures 1 and 2. A light weight motor oil may be used, as in figrue 1; or a heavier lubricant such as grease gun lubricant, as in figure 2.

Illustrated in figure 1 is one easy and effective method of applying lubrication. Dip the brush into the lubricant and apply. In some cases a rag or piece of sheepskin is dipped in the lubricant and used to swab the lubricant on to the rope.

Another simple method is shown in figure 2. Leather gloves are preferred to canvas because of greater protection and less penetration of the grease.

Fig. 1

Fig. 2

"LIFE OF WIRE LINE"

So many variable factors can cause the deterioration of wire line cable that it is not possible to determine a definite life expectancy.

Some of these factors are:

1. Load being handled.
2. Corrosive conditions.
3. Maintenance of the unit.
   a. Keep the sheaves turning freely.
   b. Maintain tension on cable to insure proper spooling.
   c. Lubricate line. (See above)
   d. Avoid kinks in cable.
   e. Avoid abrasive action and contact with sharp corners.
4. Frequency of use.

Auto Crane units, with 8000 pound ratings, use 3/8 inch diameter galvanized preformed 7 x 19 aircraft cable which, when new, has a minimum strength of 14,400 pounds. It is recommended when 4,000 pound loads are exceeded to use a two-part line with a traveling block. It can be seen that there is a safety factor of 3.6 to 1 when the cable is new.

Keeping the above factor of safety in mind and knowing the kind of loads that will be handled, the user can determine by inspection of the cable as to when it should be replaced.

Items to look for while inspecting the cables are:

1. Broken strands.
2. Kinks and flattened sections.
3. Corrosion and abrasion.

PEDESTAL ASSEMBLY, 8005H - AW-480000

ITEM	QTY.	PART NO.	DESCRIPTION
55	1	480016	CYLINDER, BOOM (COMPLETE)
	1	480016-001	CASE ASSEMBLY
	1	480016-002	SHAFT ASSEMBLY
	1	480016-003	HEAD GLAND
	1	480016-004	PISTON
	1	480013	SEAL KIT
56	1	480314	CARTRIDGE CHECK VALVE
57	1	480553	PLUG, PIPE
58	2	360054	ADAPTER
59	2	750413	REDUCER
60	2	750412	SWIVEL JOINT
61	1	480011	SEAL, ROTATION ACTUATOR
62	1	480093	PENDANT ASSEMBLY

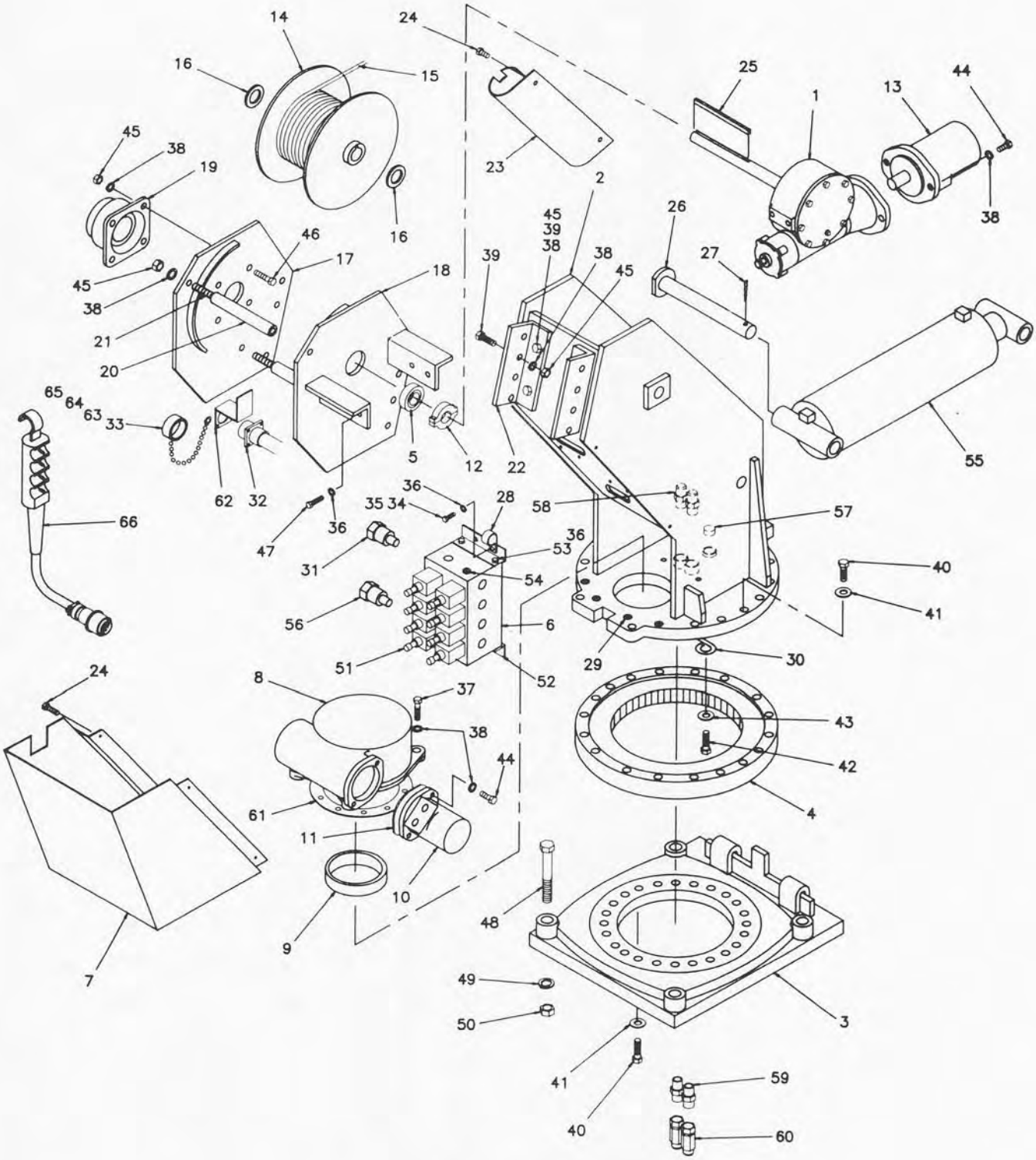

AW-480000-001
PEDESTAL ASSEMBLY, 8005H
REMOVABLE PENDANT

PEDESTAL ASSEMBLY 8005H - AW-480000-001

ITEM	QTY.	PART NO.	DESCRIPTION
1	1	480075	ACTUATOR, HOIST
2	1	480050	PEDESTAL WELDMENT ASS'Y
3	1	480040	BASE PLATE ASSEMBLY
4	1	480023	BEARING, ROTATION
5	1	400500	BEARING
6	1	480313	MANIFOLD, BLOCK
7	1	480160	COVER, VALVE
8	1	480028	GEAR BOX, ROTATION
9	1	360162	RING, ECCENTRIC
10	1	480027	MOTOR, HYD. (ROTATION)
11	1	480019	GASKET, MOTOR
12	1	330468	COLLAR, SPLIT LOCK
13	1	480076	MOTOR, HYD. (HOIST)
14	1	480066	DRUM, HOIST
15	1	480031	CABLE ASSEMBLY (3/8")
16	2	480073	SPACER, WINCH SHAFT
17	1	480064	SIDE PLATE - LEFT
18	1	480062	SIDE PLATE - RIGHT
19	1	480077	BEARING, 4-BOLT
20	2	480069	SPACER, TUBE
21	2	480070	ROD, SPACER
22	2	480072	BRACKET, MOUNTING
23	1	634000	GUARD, PENDANT
24	6	002615	SCREW, 1/4-20 X 3/8 S.T.
25	1	480094	KEY, SQ. 3/8
26	1	480127	PIN, PEDESTAL / CYLINDER
27	1	360123	PIN, SPRING
28	1	480024	MOUNT, PENDANT RETAINER
29	4	006205	SCREW, SC. HD. 5/8 NC X 1-1/4 G5
30	1	360207	RETAINER, ECCENTRIC RING
31	1	480183	CARTRIDGE, FLOW REGULATOR (480183-001, SEAL KIT)
32	1	480802	RECEPTACLE ASSEMBLY
33	1	300413	CAP, RECEPTACLE
34	4	008701	SCREW, HX. HD. 3/8 NC X 1" LG.
35	4	017100	NUT, HX. 3/8 NC CP
36	8	021100	WASHER, SP. LK. 3/8 CP
37	4	011608	SCREW, HX. HD. 1/2 NC X 2" LG. G5
38	28	021500	WASHER, SP. LK. 1/2 CP
39	12	010201	BOLT, HX. 1/2 NC X 1-1/2" LG. G5
40	38	012198	SCREW, HX. HD. 5/8 NC X 1-3/4" LG. G8
41	38	023902	WASHER, FL. 5/8 HARDENED
42	1	007402	SCREW, HX. HD. 5/16 NC X 5/8" LG. G5
43	5	020600	WASHER, SP. LK. 5/16
44	4	012197	SCREW, SC. HD. 1/2 NC X 1-1/2" G5
45	20	017701	NUT, HX. 1/2 NC CP
46	4	011605	SCREW, HX. HD. 1/2 NC X 1-3/4" G5
47	4	008601	SCREW, HX. HD. 3/8 NC X 7/8" G5
48	4	015104	SCREW, HX. HD. 7/8 NF X 5" G5
49	4	022200	WASHER, SP. LK. 7/8
50	4	018900	NUT, HX. 7/8 NF
51	8	480184	VALVE, CARTRIDGE
52	2	REF	BRACKET, MANIFOLD
53	4	REF	SCREW, HX. HD. 3/8 NC X 3/4" LG.
54	1	000109	PLUG, PIPE 3/8

PEDESTAL ASSEMBLY 8005H - AW-480000-001

ITEM	QTY.	PART NO.	DESCRIPTION
55	1	480016	CYLINDER, COOM (COMPLETE)
	1	480016-001	CASE ASSEMBLY
	1	480016-002	SHAFT ASSEMBLY
	1	480016-003	HEAD GLAND
	1	480016-004	PISTON
	1	480013	SEAL KIT
56	1	480314	CARTRIDGE, CHECK VALVE
57	1	480553	PIPE PLUG
58	2	360054	ADAPTER
59	2	750413	REDUCER
60	2	750412	SWIVEL JOINT
61	1	480011	SEAL, ROTATION ACTUATOR
62	1	REF.	BRACKET (480801)
63	2	000404	SCREW, #6-32 X 5/8
64	2	019600	WASHER, #6 SP. LK.
65	2	015400	NUT #6-32
66	1	480800	REMOVABLE PENDANT

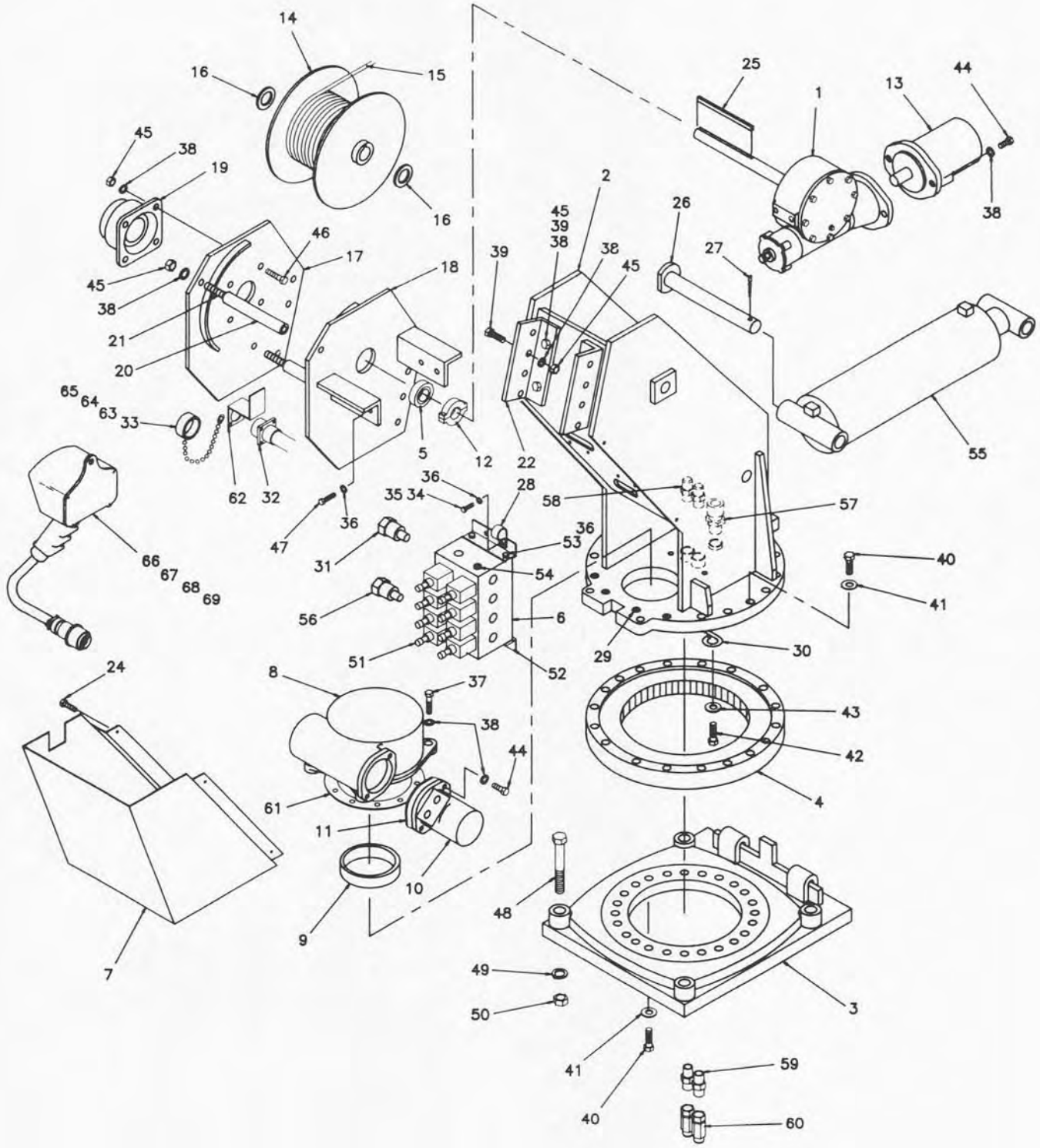

AW-480570
PEDESTAL ASSEMBLY, 8005H
PROPORTIONAL PENDANT

PEDESTAL ASSEMBLY 8005H – AW-480570

ITEM	QTY.	PART NO.	DESCRIPTION
1	1	480075	ACTUATOR, HOIST
2	1	480050	PEDESTAL WELDMENT ASS'Y
3	1	480040	BASE PLATE ASSEMBLY
4	1	480023	BEARING, ROTATION
5	1	400500	BEARING
6	1	480313	MANIFOLD, BLOCK
7	1	480160	COVER, VALVE
8	1	480028	GEAR BOX, ROTATION
9	1	360162	RING, ECCENTRIC
10	1	480027	MOTOR, HYD. (ROTATION)
11	1	480019	GASKET, MOTOR
12	1	330468	COLLAR, SPLIT LOCK
13	1	480076	MOTOR, HYD. (HOIST)
14	1	480066	DRUM, HOIST
15	1	480031	CABLE ASSEMBLY (3/8")
16	2	480073	SPACER, WINCH SHAFT
17	1	480064	SIDE PLATE - LEFT
18	1	480062	SIDE PLATE - RIGHT
19	1	480077	BEARING, 4-BOLT
20	2	480069	SPACER, TUBE
21	2	480070	ROD, SPACER
22	2	480072	BRACKET, MOUNTING
23			
24	4	002615	SCREW, 1/4-20 X 3/8 S.T.
25	1	480094	KEY, SQ. 3/8
26	1	480127	PIN, PEDESTAL / CYLINDER
27	1	360123	PIN, SPRING
28	1	480024	MOUNT, PENDANT RETAINER
29	4	006205	SCREW, SC. HD. 5/8 NC X 1-1/4 G5
30	1	360207	RETAINER, ECCENTRIC RING
31	1	480183	CARTRIDGE, FLOW REGULATOR (480183-001, SEAL KIT)
32	1	480597	RECEPTACLE ASSEMBLY
33	1	480547	CAP, PENDANT RECEPTACLE
34	4	008701	SCREW, HX. HD. 3/8 NC X 1" LG.
35	4	017100	NUT, HX. 3/8 NC CP
36	8	021100	WASHER, SP. LK. 3/8 CP
37	4	011608	SCREW, HX. HD. 1/2 NC X 2" LG. G5
38	28	021500	WASHER, SP. LK. 1/2 CP
39	12	010201	BOLT, HX. 1/2 NC X 1-1/2" LG. G5
40	38	012198	SCREW, HX. HD. 5/8 NC X 1-3/4" LG. G8
41	38	023902	WASHER, FL. 5/8 HARDENED
42	1	007402	SCREW, HX. HD. 5/16 NC X 5/8" LG. G5
43	5	020600	WASHER, SP. LK. 5/16
44	4	012197	SCREW, SC. HD. 1/2 NC X 1-1/2" G5
45	20	017701	NUT, HX. 1/2 NC CP
46	4	011605	SCREW, HX. HD. 1/2 NC X 1-3/4" G5
47	4	008601	SCREW, HX. HD. 3/8 NC X 7/8" G5
48	4	015104	SCREW, HX. HD. 7/8 NF X 5" G5
49	4	022200	WASHER, SP. LK. 7/8
50	4	018900	NUT, HX. 7/8 NF
51	8	480184	VALVE, CARTRIDGE
52	2	REF	BRACKET, MANIFOLD
53	4	REF	SCREW, HX. HD. 3/8 NC X 3/4" LG.
54	1	000109	PLUG, PIPE 3/8

PEDESTAL ASSEMBLY 8005H – AW-480570

ITEM	QTY.	PART NO.	DESCRIPTION
55	1	480016	CYLINDER, BOOM (COMPLETE)
	1	480016-001	CASE ASSEMBLY
	1	480016-002	SHAFT ASSEMBLY
	1	480016-003	HEAD GLAND
	1	480016-004	PISTON
	1	480013	SEAL KIT
56	1	480314	CARTRIDGE, CHECK VALVE
57	1	370433	CORD CONNECTOR
58	2	360054	ADAPTER
59	2	750413	REDUCER
60	2	750412	SWIVEL JOINT
61	1	480011	SEAL, ROTATION ACTUATOR
62	1	REF.	BRACKET, (480546)
63	2	000404	SCREW, # 6-32 X 5/8
64	2	019600	WASHER # 6 SP. LK.
65	2	015400	NUT HX. # 6-32
66	1	480590	PENDANT, FOUR FUNCTION
67	1	480591	PENDANT, FOUR FUNCTION PROPORTIONAL
68	1	480592	PENDANT, EIGHT FUNCTION
69	1	480593	PENDANT, EIGHT FUNCTION PROPORTIONAL

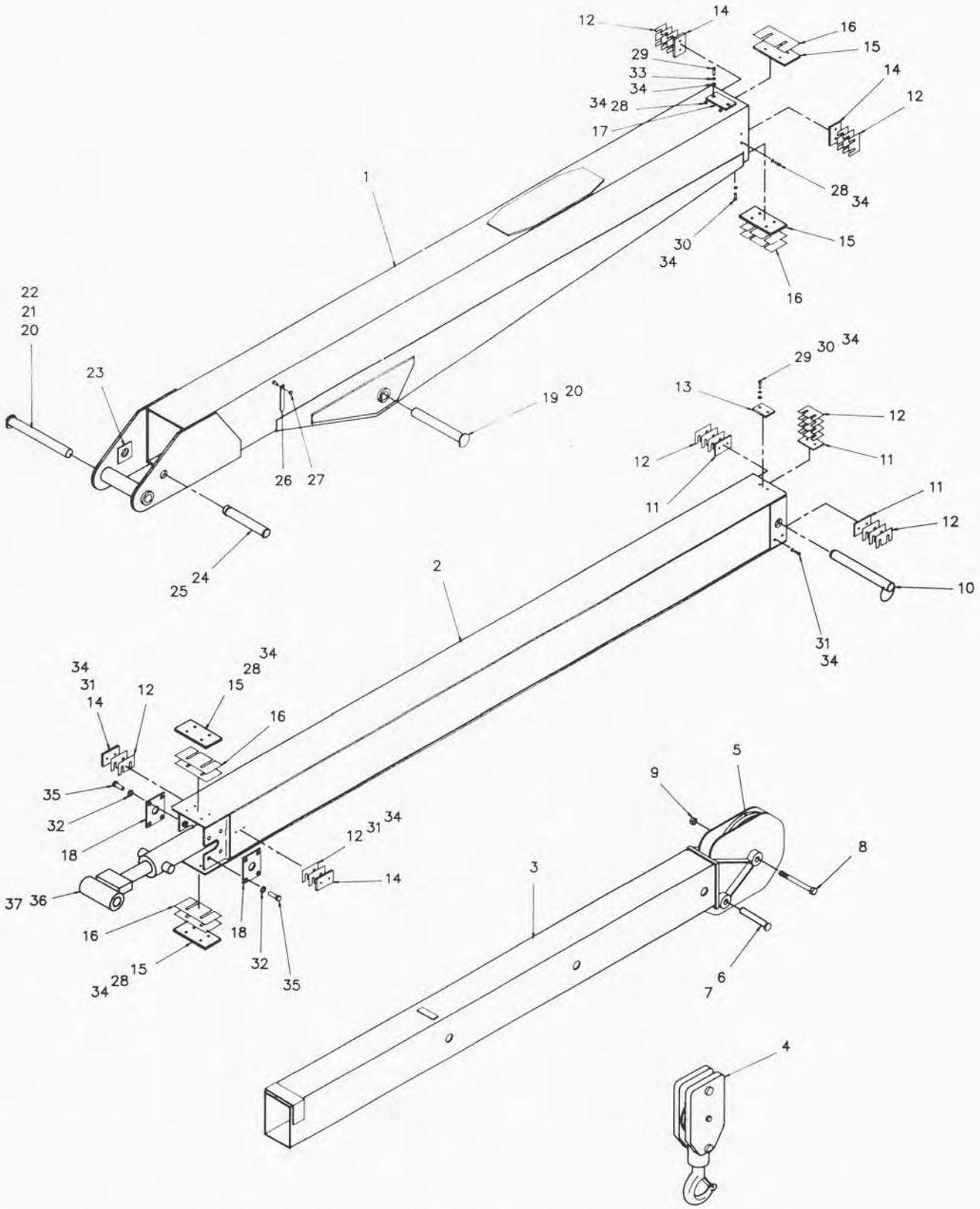

AW-480585
BOOM ASSEMBLY

BOOM ASSEMBLY - AW-480585

ITEM	QTY.	PART NO.	DESCRIPTION
1	1	480080	BOOM, LOWER (SEE NOTE 1)
2	1	480100	BOOM, POWER
3	1	480310	BOOM, MANUAL
4	1	360603	SWIVEL BLOCK
5	1	366198	SHEAVE ASSEMBLY (BEARING ONLY, 366197)
6	1	360124	PIN, HITCH
7	1	360125	PIN, LOCK
8	1	014304	SCREW, HX. HD. 3/4 - NF X 6 GR5
9	1	018600	NUT, HX. LK. 3/4 - NF CP
10	1	480030	PIN, MANUAL BOOM
11	3	480120	PAD (STEEL)
12	22	480037	SHIM, SMALL (.032 THK)
13	1	480118	PAD, LOWER BOOM
14	4	480036	PAD, BOOM (NYLATRON)
15	4	480032	PAD, BOOM (NYLATRON)
16	6	480038	SHIM, LARGE (.032 THK)
17	1	366201	PAD, BOOM
18	2	480105	RETAINER, EXT. CYLINDER
19	1	480123	PIN, BOOM/CYLINDER
20	2	360123	PIN, SPRING
21	1	480125	PIN, PEDESTAL/BOOM
22	1	239000	GREASE ZERK
23	2	480121	SPACER
24	1	480129	PIN, EXTENSION CYLINDER
25	2	480029	RING, RETAINING
26	2	360038	ANGLE INDICATOR
27	2	016300	NUT, HX. LK. 1/4 - NC
28	14	005102	SCREW, HX. HD. 1/4 - 28 X 5/8 CP
29	4	005601	SCREW, HX. HD. 1/4 - 20 X 1"
30	4	005501	SCREW, HX. HD. 1/4 - 28 X 3/4 CP
31	8	005406	SCREW, HX. HD. 1/4 - 28 X 1/2 CP
32	8	010201	SCREW, HX. HD. 1/2 X 1 1/2 - NC G5
33	4	020300	WASHER, FL. 1/4
34	30	020200	WASHER, SP. LK. 1/4
35	8	021500	WASHER, SP. LK. 1/2 CP
36	1	480015	CYLINDER, EXTENSION (COMPLETE)
	1	480015-001	CASE ASSEMBLY
	1	480015-002	SHAFT ASSEMBLY
	1	480015-003	HEAD GLAND
	1	480015-004	PISTON
37	1	480012	SEAL KIT

NOTES:

1. BOOM 480080 HAS HOOKS FOR PENDANT CABLE.
   BOOM 480582 IS EXACTLY THE SAME LESS THE HOOKS
   AND IS USED FOR PROPORTIONAL UNITS.

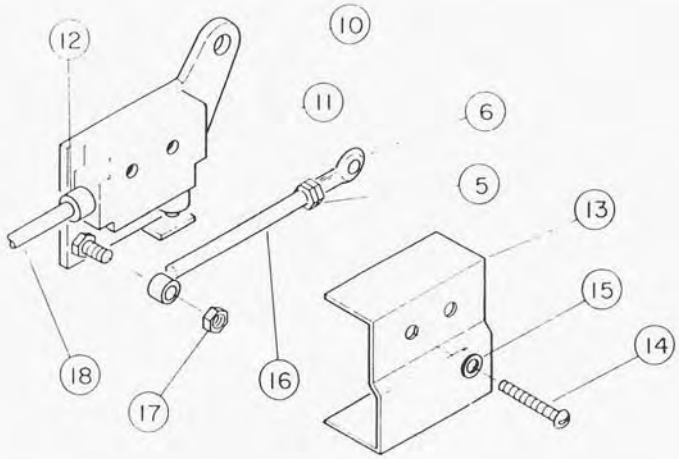

SWITCH ASSEMBLY, P/N 364006

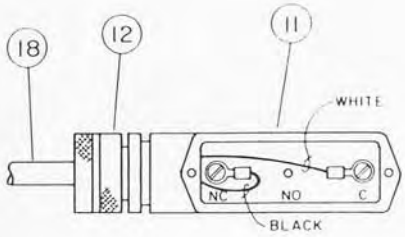

SWITCH ASSEMBLY

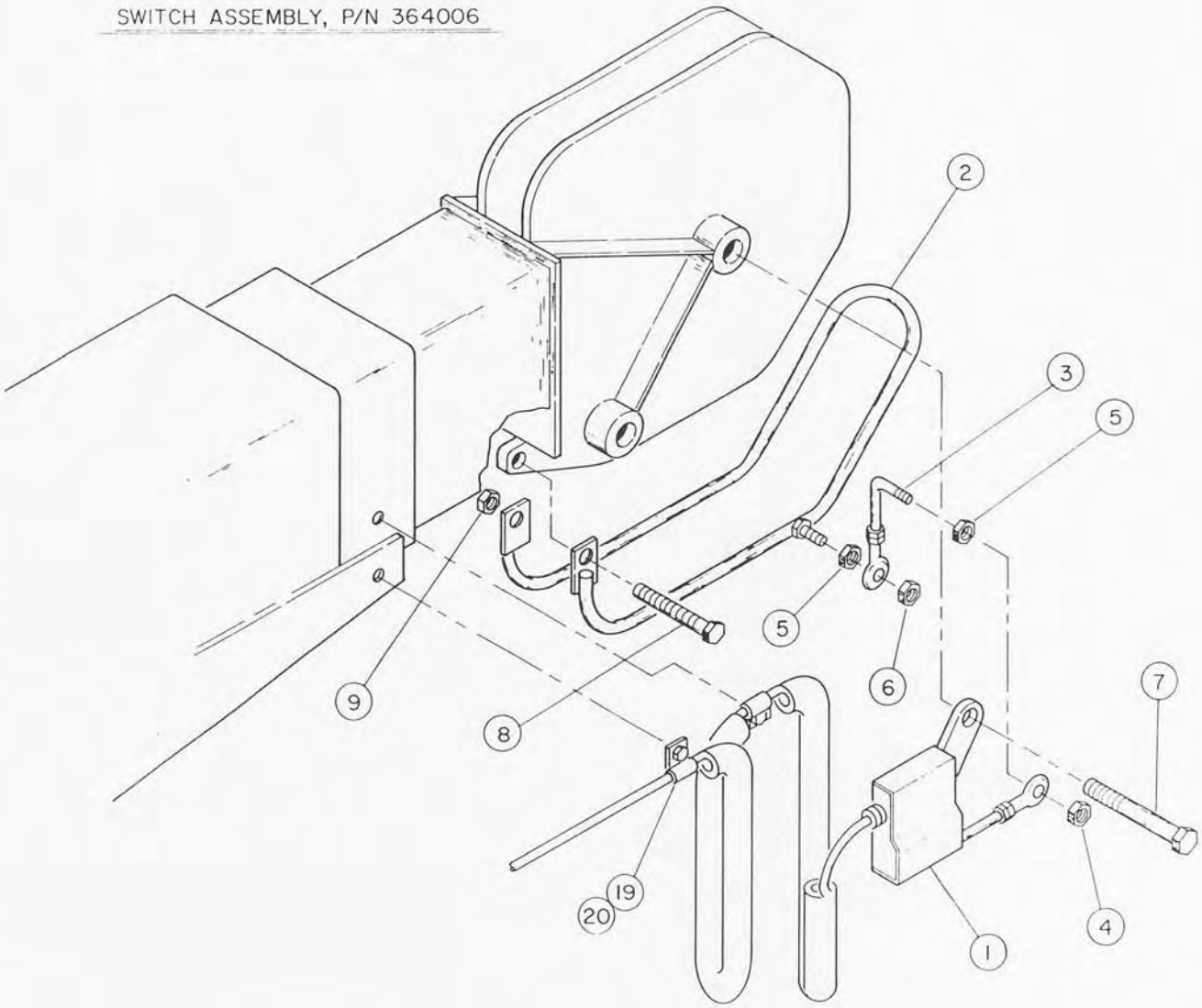

2 - BLOCK ASSEMBLY

2 - BLOCK ASSEMBLY, AW-069

ITEM	QTY.	PART NO.	DESCRIPTION
1	1	364006	2 - BLOCK SWITCH ASSEMBLY
2	1	366116	2 - BLOCK ASSEMBLY
3	1	366196	PIVOT ARM
4	2	016200	NUT, HX. LK. 1/4 NFCP
5	6	016100	NUT, HX. 1/4 NFCP
6	2	363006	BEARING, ROD END
7	1	REF.	SCREW, HX. 3/4 X 6" NF
8	1	007803	SCREW, HX. HD. 5/16 - NC X 3 1/2" LG
9	1	016801	NUT, HX. LK. 5/16 - NC
10	1	363003	MOUNTING PLATE ASS'Y
11	1	646900	SWITCH
12	1	642908	CORD CONNECTOR
13	1	363004	COVER, SWITCH
14	2	002602	SCREW RD. HD. #6 X 1 1/4 NC
15	2	019600	WASHER, SP. LK. #6
16	1	363005	ROD
17	1	017301	NUT, HX. LK. 3/8 NC
18	1	363018	CORD ASSEMBLY
19	7	000115	CLIP
20	7	002608	SCREW HX. HD. 1/4 X 3/4

NOTE:

1. ITEMS 11,12,18 MAY BE PURCHASED AS AN ASSEMBLY WITH PART NO. 363015.

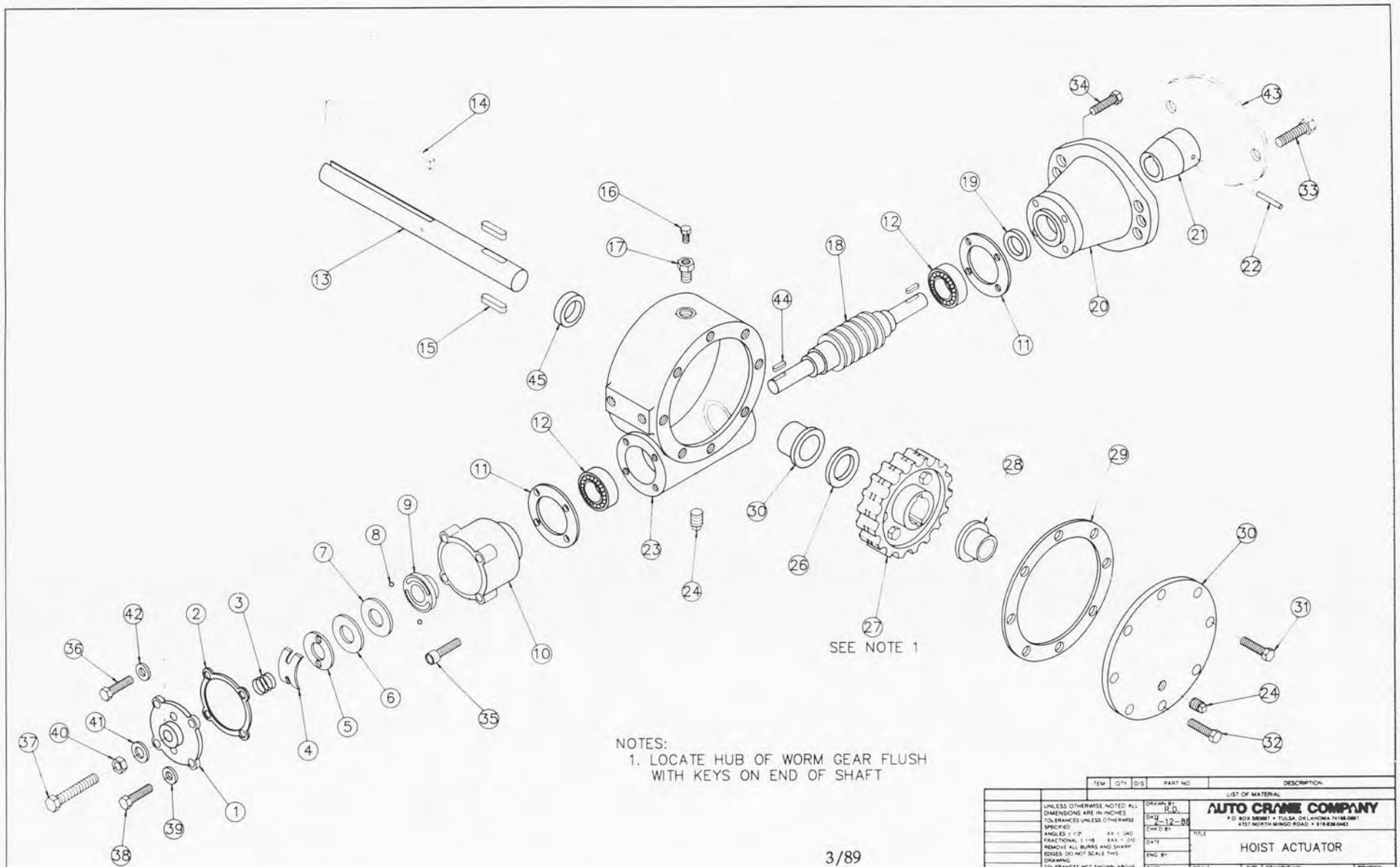

NOTES:
1. LOCATE HUB OF WORM GEAR FLUSH WITH KEYS ON END OF SHAFT

3/89

ITEM	QTY	DIS	PART NO	DESCRIPTION

LIST OF MATERIAL

UNLESS OTHERWISE NOTED ALL DIMENSIONS ARE IN INCHES
TOLERANCES UNLESS OTHERWISE SPECIFIED
ANGLES ± 1/2° .XX ± .040
FRACTIONAL ± 1/16 .XXX ± .010
REMOVE ALL BURRS AND SHARP EDGES. DO NOT SCALE THIS DRAWING
TOLERANCES NOT SHOWN ABOVE ARE PER ANSI Y14.5-1973

THIS PRINT IS THE PROPERTY OF AUTO CRANE CO AND MUST NOT BE USED IN ANY MANNER DETRIMENTAL TO THEIR INTERESTS

NEXT ASS'Y

DRAWN BY R.D.
DATE 2-12-86
CHK'D BY
DATE
ENG. BY
DATE

AUTO CRANE COMPANY
P.O. BOX 580887 • TULSA, OKLAHOMA 74158-0887
4707 NORTH MINGO ROAD • 918/836-0463

TITLE HOIST ACTUATOR

SCALE | SIZE D | DRAWING NO AW-480075 | REVISION
WEIGHT | SHEET 1 OF 1

CHG LTR	DESCRIPTION	DATE	APP'D
	REVISIONS		

HOIST ACTUATOR - AW-480075

ITEM	QTY.	PART NO.	DESCRIPTION
1	1	360450	COVER, WORM BRAKE
2	1	360359	GASKET
3	1	360368	SPRING
4	1	360367	SPRING, FLAT
5	1	360342	PLATE RETAINER
6	1	360364	PLATE, THRUST
7	1	360331	CAM PLATE
8	2	360345	BALL, BRAKE
9	1	360339	HUB-BRAKE
10	1	360336	HOUSING, BRAKE
11	2	360358	GASKET
12	2	360346	BEARING
13	1	480078	SHAFT-OUTPUT
14	1	480094	KEY 5/16 (REF. FOR DRUM)
15	2	360340	KEY
16	1	360360	FITTING-RELIEF
17	1	360361	REDUCER
18	1	360344	WORM-R.H.
19	1	360365	OIL SEAL
20	1	360330	ADAPTER
21	1	360332	COUPLING
22	1	360363	SPIROL PIN
23	1	360451	HOUSING - GEAR
24	2	360362	PIPE PLUG
25	1	360348	BUSHING
26	1	360369	THRUST WASHER
27	1	360457	GEAR/HUB ASSEMBLY R.H. 46:1
28	1	360347	BUSHING
29	1	360357	GASKET
30	1	360333	COVER
31	7	360350	CAPSCREW 1/4 - 20 NC X 3/4 HX. HD. GR.5
32	1	360452	CAPSCREW 1/4 - 20 NC X 3/4 HX. HD. NYLOK HVY PATCH GR.5
33	2	010202	CAPSCREW 1/2 - 13 NC X 1 HX. HD.
34	4	360352	CAPSCREW 1/4 - 20 NC X 1 3/4 SOC. HD. LOC.-WEL
35	4	360454	CAPSCREW 1/4 - 20 NC X 7/8 SOC. HD. BUTTON GR.5
36	2	360453	CAPSCREW 1/4 - 20 NC X 1 HX. HD. GR.5 ALL THRD. NYLOC HVY. PATCH
37	1	360456	CAPSCREW 3/8 - 16 NC X 1 1/2 HX. HD. ALL THRD. GR.5
38	4	005604	CAPSCREW 1/4 - 20 NC X 1 HX. HD. GR.5
39	4	360354	LOCKWASHER 1/4 MED. SECT. C.P.
40	1	360353	NUT 3/8 - 16 NC HX. JAM
41	1	360371	SEAL
42	2	360455	WASHER - FLAT 1/4 ALUM.
43	1	360349	COVER - HYD. ADAPTER
44	2	360341	KEY
45	1	360366	OIL SEAL
46	1	480289	SEAL AND GASKET KIT

3/89

AUTOMATIC SAFETY BRAKE ASSEMBLY (OIL COOLED)
HOIST

1. Winch has right hand worm and gear and spools over drum; use number one slots for brake balls.
2. Install brake hub on winch worm with key.
3. Assemble balls in cam using hard grease to hold balls in place.
4. Install cam and balls, fitting balls in slots on hub.
5. Install brake disc.
6. Install retainer.
7. Install flat spring in brake housing cover (arch down).
8. Install brake housing cover, fitting pins in slots on spring and holes in retainer.
9. Test brake by shifting winch to UP then DOWN to see if brake is working in proper rotation. If not, remove brake and locate brake balls in opposite set of slots.
10. Adjust to suit by tightening or loosening screw on outside of cover. When proper adjustment is obtained, secure screw with jam nut.

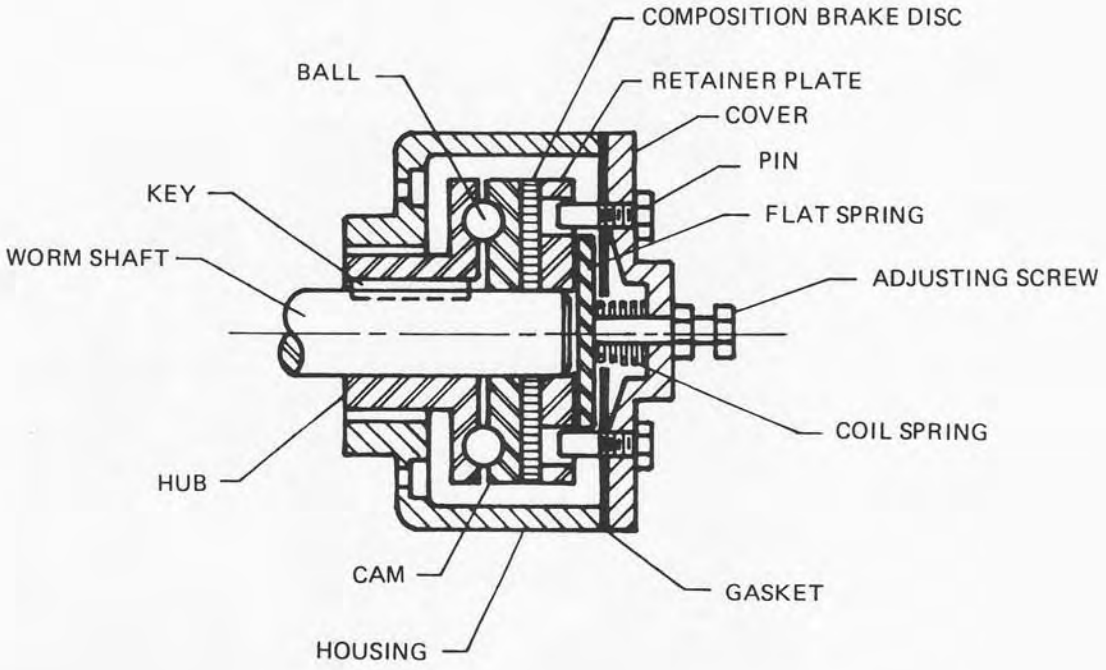

FIXTURE NO	FINISH NO

CHG LTR	REVISIONS DESCRIPTION	DATE	APP'D

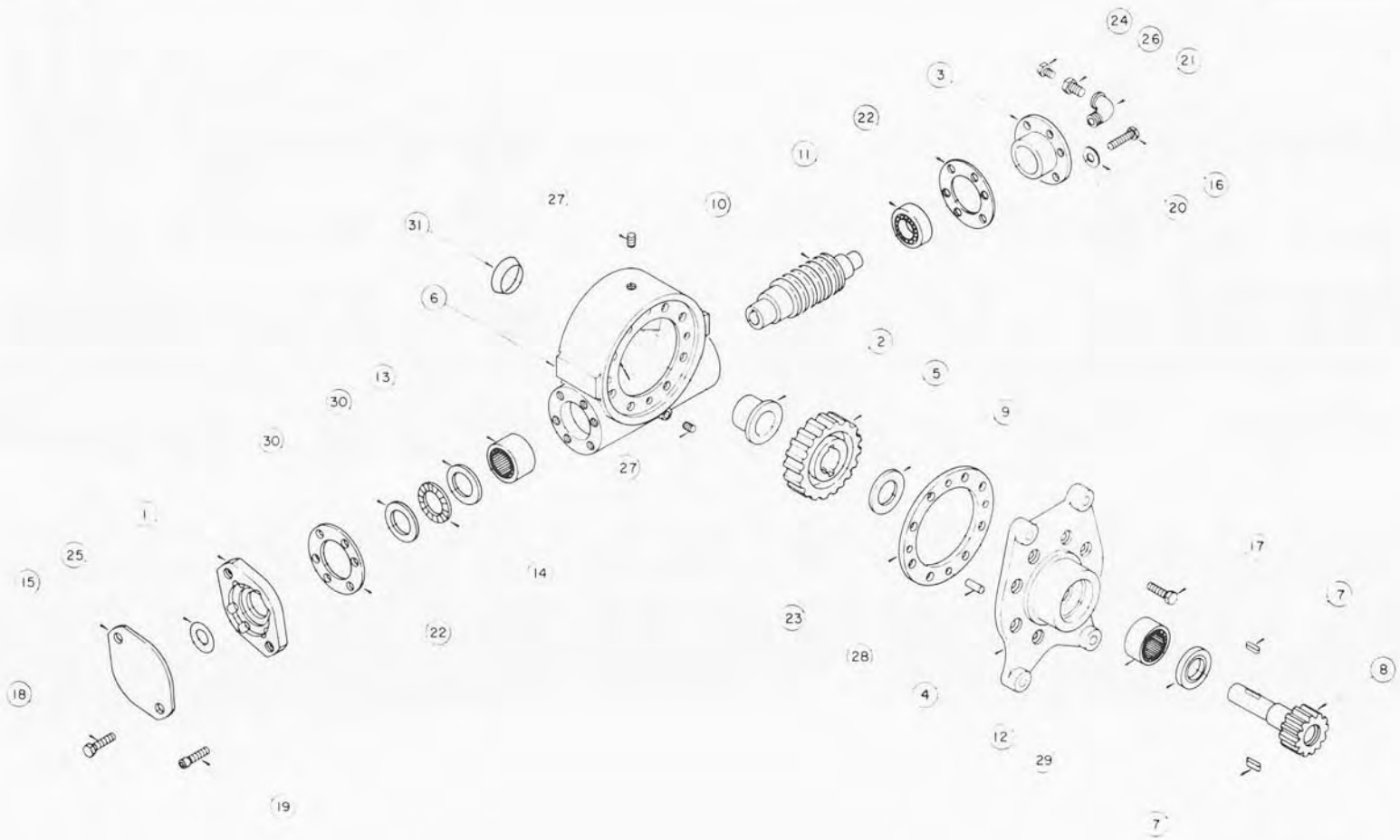

ITEM	QTY	DIS	PART NO	DESCRIPTION

LIST OF MATERIAL

UNLESS OTHERWISE NOTED ALL DIMENSIONS ARE IN INCHES
TOLERANCES UNLESS OTHERWISE SPECIFIED
ANGLES ± 1/2° XX ± .040
FRACTIONAL ± 1/16 XXX ± .010
REMOVE ALL BURRS AND SHARP EDGES. DO NOT SCAL THIS DRAWING
TOLERANCES NOT SHOWN ABOVE ARE PER ANSI M14.5-1973

THIS PRINT IS THE PROPERTY OF AUTO CRANE CO AND MUST NOT BE USED IN ANY MANNER DETRIMENTAL TO THEIR INTERESTS

NEXT ASS'Y

DRAWN BY: R. CHAY
DATE: 10-29-86
CHK'D BY
DATE
ENG BY
DATE

AUTO CRANE COMPANY

TITLE: GEAR BOX, ROTATION 8005H

SCALE: —— SIZE: D DRAWING NO: AW-480028 REVISION: ——

WEIGHT: SHEET 1 OF 1

3/89

GEAR BOX, ROTATION AW-480028

ITEM	QTY.	PART NO.	DESCRIPTION
1	1	480240	ADAPTER
2	1	480241	BUSHING
3	1	480242	CAP, BEARING
4	1	480243	COVER
5	1	480244	GEAR - R.H.
6	1	480237	HOUS!NG-GEAR
7	2	480246	KEY
8	1	480247	SHAFT-OUTPUT
9	1	480248	WASHER-THRUST
10	1	480249	WORM, R.H.
11	1	480251	BEARING-BALL
12	1	480252	BEARING-NEEDLE
13	1	480253	BEARING-NEEDLE
14	1	480254	BEARING-THRUST
15	1	480255	COVER
16	6	007400	CAPSCREW, 5/16 - 18 NC X 1" LG. HX. HD.
17	8	480238	CAPSCREW, 5/16 - 18 NC X 1 1/4 LG. HX. NYLOC HVY PATCH
18	2	011508	CAPSCREW, 1/2 - 13 NC X 3/4 LG. HX. HD.
19	6	480256	CAPSCREW, 5/16 - 18 NC X 1" LG. SOC. HD. LOC.-WEL
20	6	480258	LOCKWASHER, 5/16 MED. SECT. C.P.
21	1	480259	ELBOW, 90°
22	2	480260	GASKET
23	1	480250	GASKET
24	1	480262	FITTING, RELIEF
25	1	480239	O-RING
26	1	480263	REDUCER
27	2	480264	PLUG, PIPE
28	4	480265	PIN-DOWEL
29	1	480266	SEAL-OIL
30	2	480268	WASHER-THRUST
31	1	480269	PLUG, EXPANSION

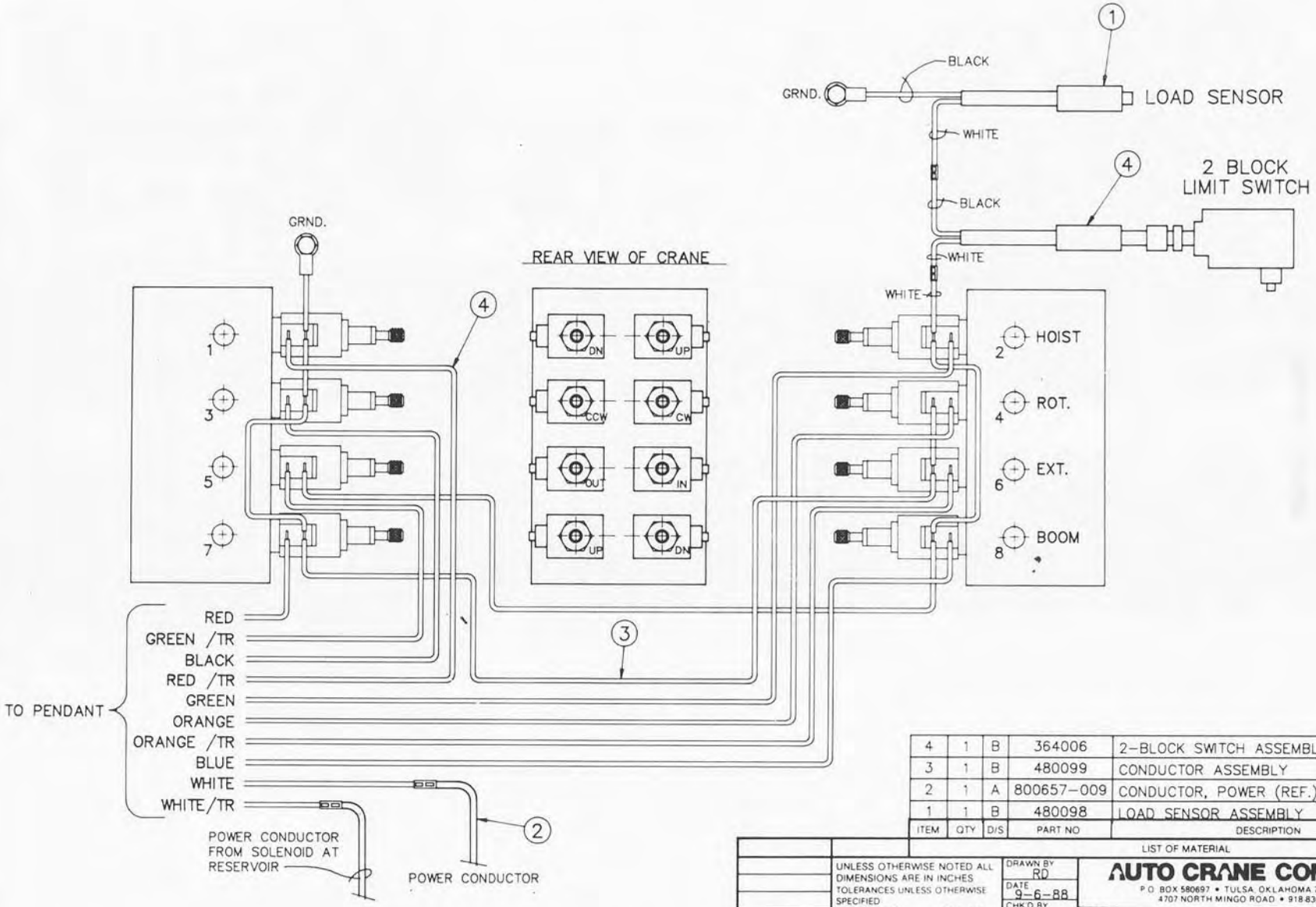

ITEM	QTY	D/S	PART NO	DESCRIPTION
4	1	B	364006	2-BLOCK SWITCH ASSEMBLY
3	1	B	480099	CONDUCTOR ASSEMBLY
2	1	A	800657-009	CONDUCTOR, POWER (REF.)
1	1	B	480098	LOAD SENSOR ASSEMBLY

LIST OF MATERIAL

UNLESS OTHERWISE NOTED ALL DIMENSIONS ARE IN INCHES
TOLERANCES UNLESS OTHERWISE SPECIFIED
ANGLES ± 1/2° | XX ± .040
FRACTIONAL ± 1/16 | XXX ± .010
REMOVE ALL BURRS AND SHARP EDGES. DO NOT SCALE THIS DRAWING
TOLERANCES NOT SHOWN ABOVE ARE PER ANSI Y14.5-1973

DRAWN BY RD
DATE 9-6-88
CHK'D BY
DATE
ENG BY
DATE

THIS PRINT IS THE PROPERTY OF AUTO CRANE CO AND MUST NOT BE USED IN ANY MANNER DETRIMENTAL TO THEIR INTERESTS.

NEXT ASS'Y

AUTO CRANE COMPANY
P.O. BOX 580697 • TULSA, OKLAHOMA 74158-0697
4707 NORTH MINGO ROAD • 918-836-0463

TITLE
ELECTRICAL ASSEMBLY
8005H

SCALE | SIZE C | DRAWING NO AW-480095 | REVISION

WEIGHT | SHEET 1 OF 1

CHG LTR	DESCRIPTION	DATE	APP'D
	REVISIONS		

3/89

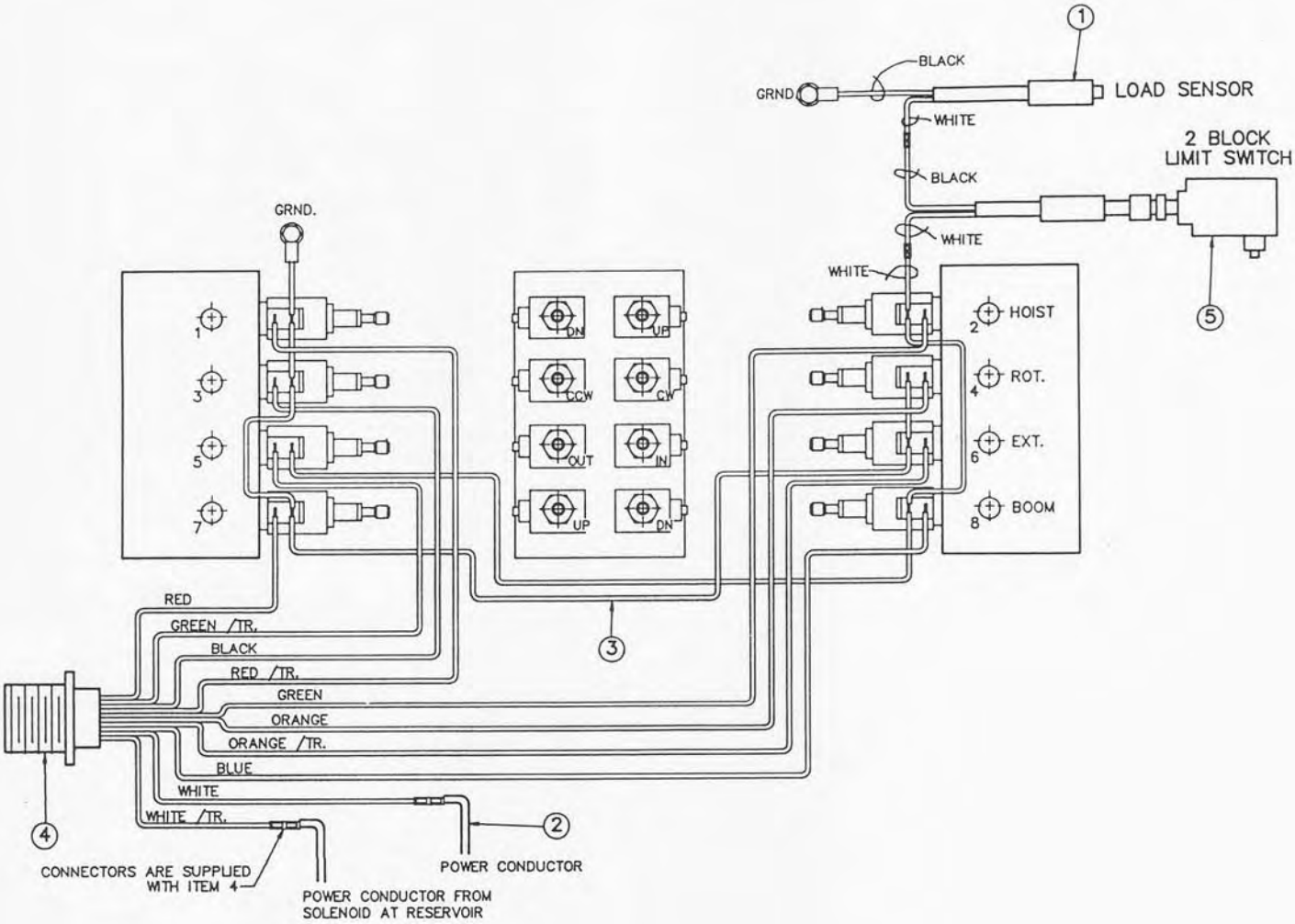

ITEM	QTY.	PART NO.	DESCRIPTION
1	1	480098	LOAD SENSOR ASSEMBLY
2	1	800657-009	CONDUCTOR, POWER (REF.)
3	1	480099	CONDUCTOR ASSEMBLY
4	1	480802	PENDANT CONDUCTOR ASSEMBLY
5	1	364006	2-BLOCK SWITCH ASSEMBLY

AW-480095-100
ELECTRICAL ASSEMBLY, 8005H
WITH REMOVABLE PENDANT

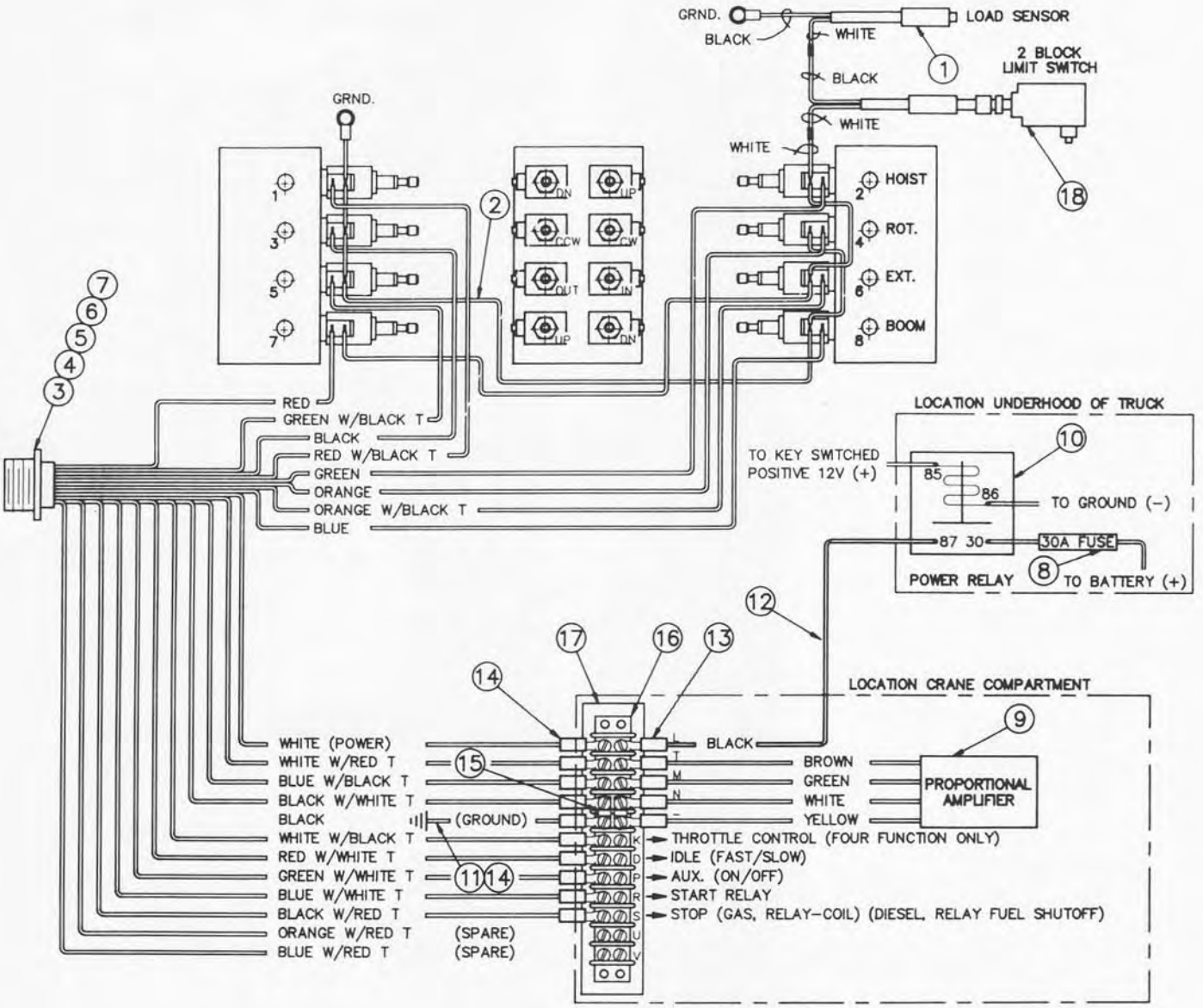

ITEM	QTY.	PART NO.	DESCRIPTION
1	1	480098	LOAD SENSOR ASS'Y
2	1	480099	CONDUCTOR ASS'Y
3	1	480597	RECEPTACLE ASS'Y
4	1	480547	CAP, PENDANT RECEPTACLE
5	2	000404	SCREW, #6-32 X 5/8"LG.
6	2	019600	WASHER, SP LK #6
7	2	015400	NUT, HX #6-32
8	1	750167	FUSE, IN-LINE 30 AMP
9	1	480522	INTEGRATED AMPLIFIER

ITEM	QTY.	PART NO.	DESCRIPTION
10	1	320355	POWER RELAY
11	1	480549	CONDUCTOR, 16GA. BLACK
12	1	800657-009	CONDUCTOR, POWER
13	1	001002	TERMINAL,RING
14	15	000101	TERMINAL, RING
15	2	636600	JUMPER
16	1	635200	TERMINAL STRIP
17	1	360610	DECAL, TERMINAL I.D.
18	1	364006	2-BLOCK SWITCH ASS'Y

AW-117
CRANE WIRING 8005H
WITH 4 & 8 FUNCTION PENDANTS PROPORTIONAL

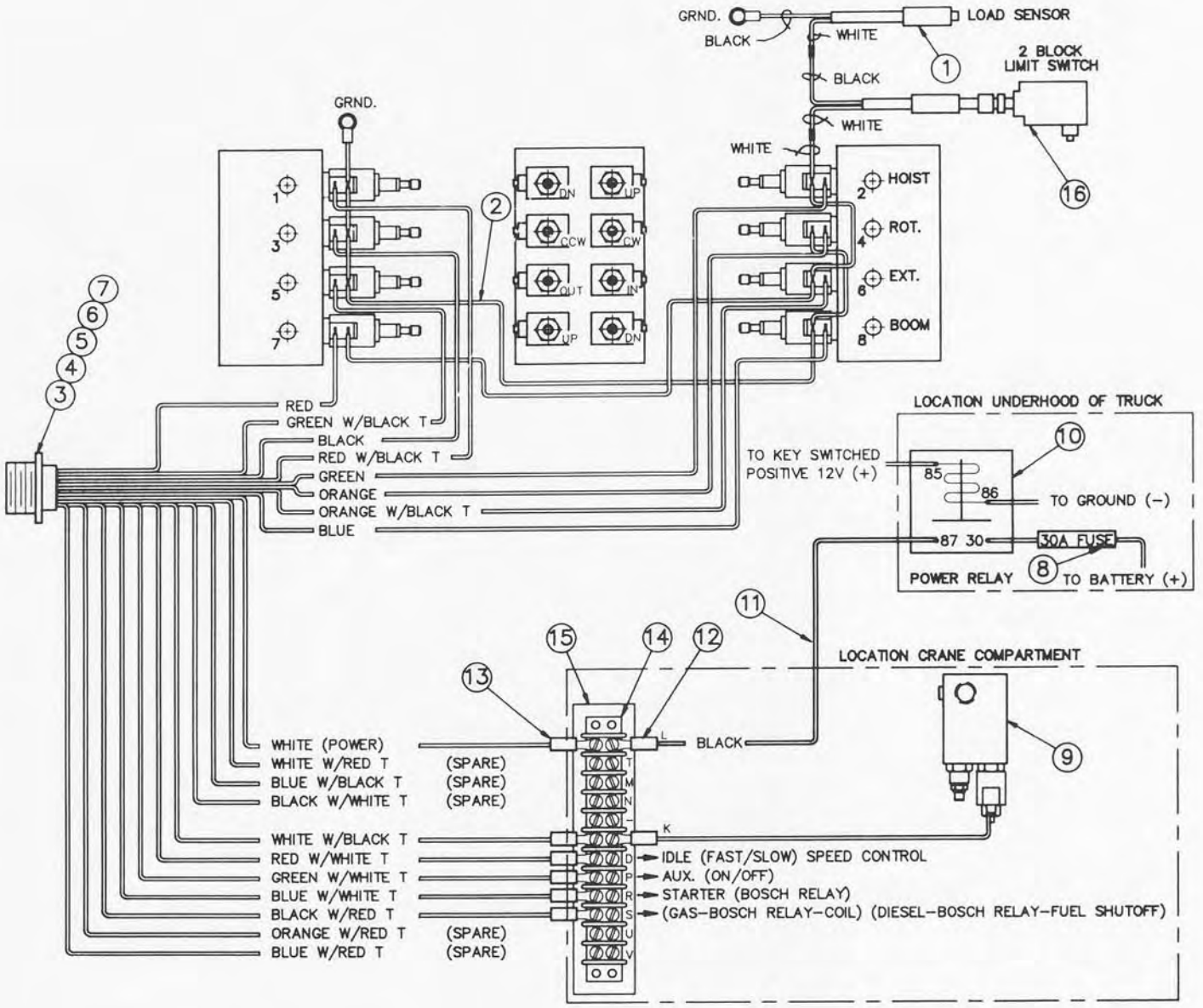

ITEM	QTY.	PART NO.	DESCRIPTION
1	1	480098	LOAD SENSOR ASS'Y
2	1	480099	CONDUCTOR ASS'Y
3	1	480597	RECEPTACLE ASS'Y
4	1	480547	CAP, PENDANT RECEPTACLE
5	2	000404	SCREW, #6-32 X 5/8"LG.
6	2	019600	WASHER, SP LK #6
7	2	015400	NUT, HX #6-32
8	1	750167	FUSE, IN-LINE 30 AMP

ITEM	QTY.	PART NO.	DESCRIPTION
9	1	480157	RELIEF VALVE ASS'Y, W/SOLENOID
10	1	320355	POWER RELAY
11	1	800657-009	CONDUCTOR, POWER
12	1	001002	TERMINAL,RING
13	7	000101	TERMINAL, RING
14	1	635200	TERMINAL STRIP
15	1	360610	DECAL, TERMINAL I.D.
16	1	364006	2-BLOCK SWITCH ASS'Y

AW-120
CRANE WIRING 8005H
WITH 4 & 8 FUNCTION PENDANTS LESS PROPORTIONAL

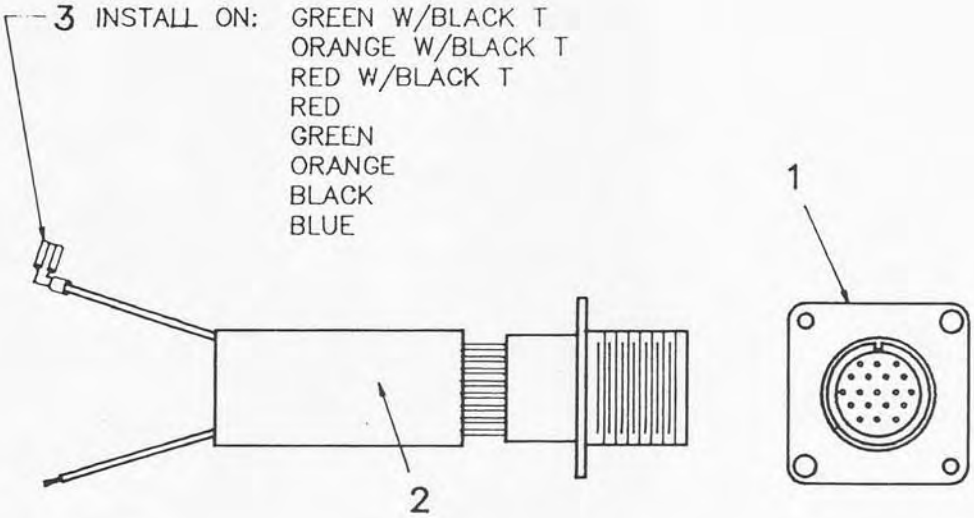

WIRING GUIDE

A–RED
B–GREEN
C–ORANGE
D–RED W/WHITE T
E–BLACK
F–RED W/ BLACK T
G–BLUE
H–ORANGE W/BLACK T
J–GREEN W/BLACK T
K–WHITE W/BLACK T
L–WHITE
M–BLUE W/BLACK T
N–BLACK W/WHITE T
P–GREEN W/WHITE T
R–BLUE W/WHITE T
S–BLACK W/RED T
T–WHITE W/RED T
U–ORANGE W/RED T
V–BLUE W/RED T

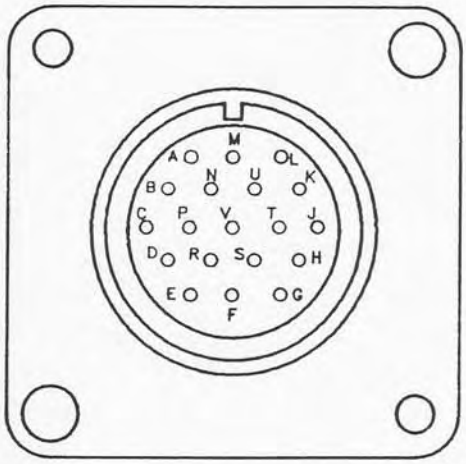

ITEM	QTY.	PART NO.	DESCRIPTION
1	1	480542	RECEPTACLE
2	1	480594–002	CONDUCTOR (8'–0")
3	8	000405	TERMINAL FLAG

AW–480597
PENDANT RECEPTACLE ASSEMBLY

FIXTURE NO.	FINISH NO.

CHG LTR	REVISIONS DESCRIPTION	DATE	APP'D

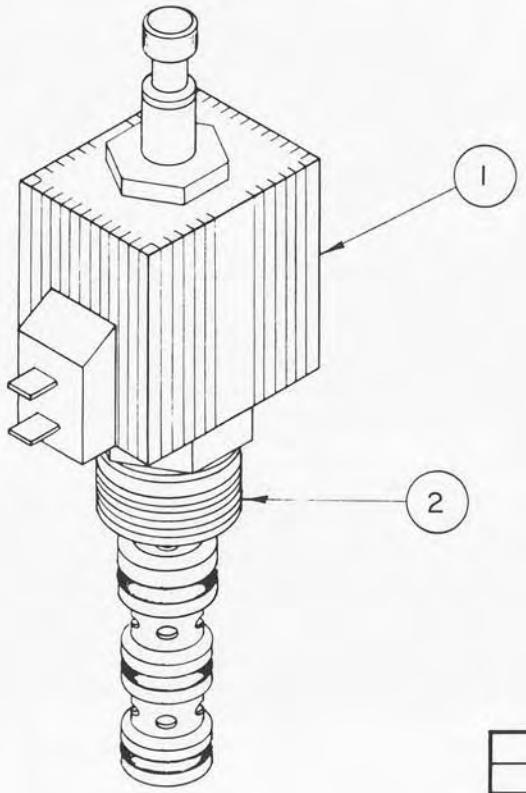

NOTE:
FOR SEAL KIT, ORDER PART NO. 480184-001

ITEM	QTY	D/S	PART NO.	DESCRIPTION
2	1	-	480186	SPOOL ASSEMBLY
1	1	-	480185	COIL, CARTRIDGE

QUANTITY — LIST OF MATERIAL

NEXT ASS'Y

UNLESS OTHERWISE NOTED ALL DIMENSIONS ARE IN INCHES.
TOLERANCES UNLESS OTHERWISE SPECIFIED.
ANGLES ± 1/2° | .XX ± .40
FRACTIONAL ± 1/16 | .XXX ± .010
REMOVE ALL BURRS AND SHARP EDGES. DO NOT SCALE THIS DRAWING.
TOLERANCES NOT SHOWN ABOVE ARE PER ANSI Y14.5-1973

THIS PRINT IS THE PROPERTY OF AUTO CRANE CO. AND MUST NOT BE USED IN ANY MANNER DETRIMENTAL TO THEIR INTERESTS.

DRAWN BY Armstrong
DATE 9.20.84
CHK'D BY
DATE
ENG. BY
DATE

AUTO CRANE COMPANY

TITLE
VALVE CARTRIDGE

SCALE ~ | SIZE B | DRAWING NO AW-480184 | REVISION

WEIGHT | SHEET 1 OF 1

RIDGWAYS 1000H

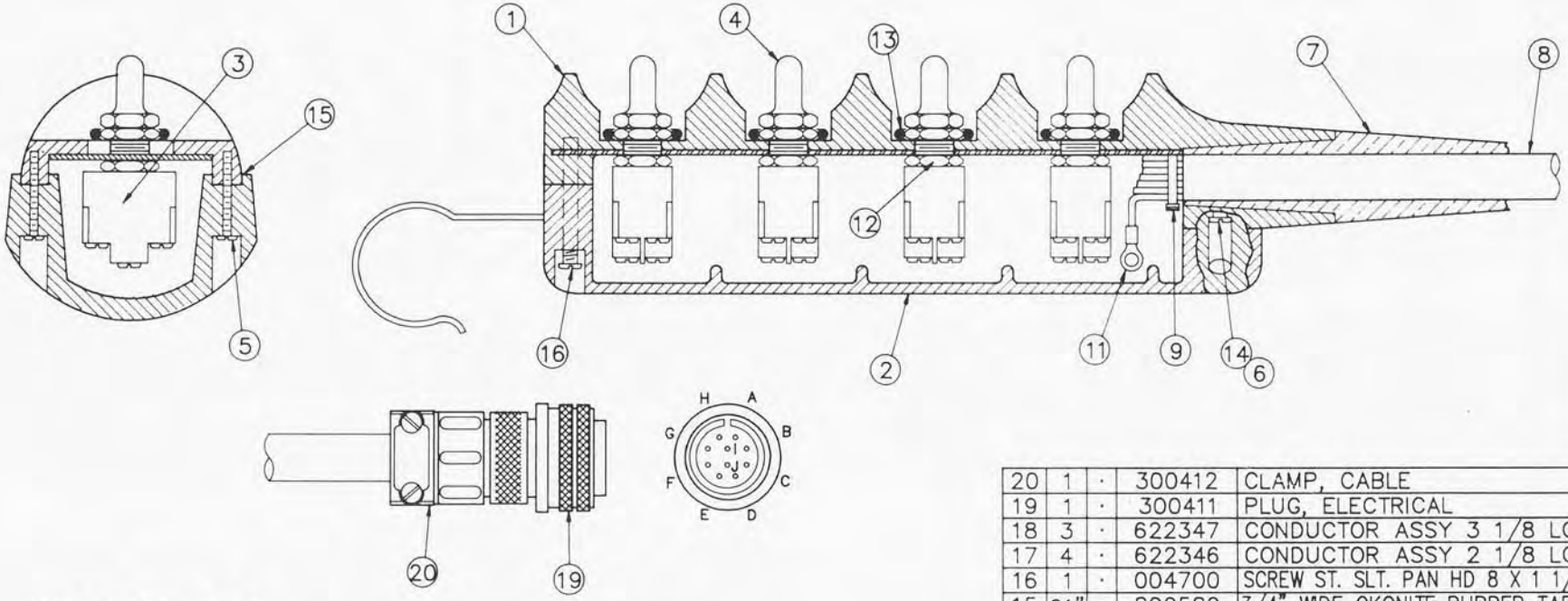

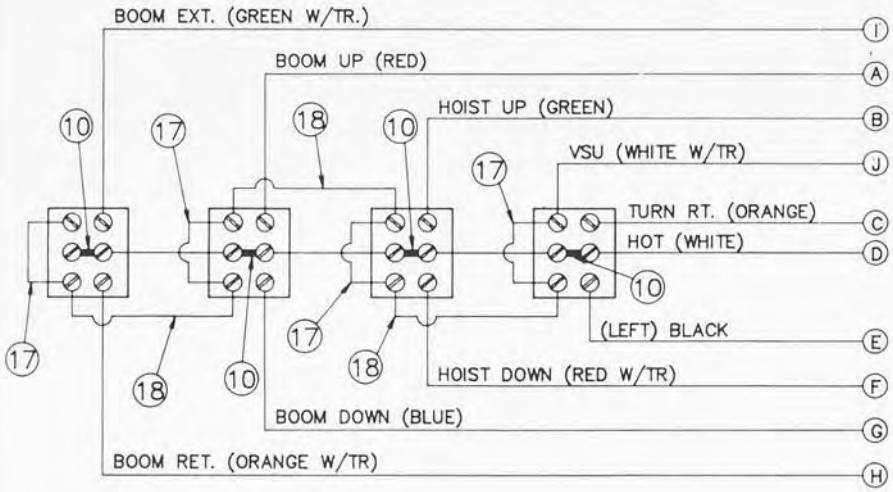

VIEW FROM BOTTOM

ITEM	QTY	D/S	PART NO	DESCRIPTION
20	1	·	300412	CLAMP, CABLE
19	1	·	300411	PLUG, ELECTRICAL
18	3	·	622347	CONDUCTOR ASSY 3 1/8 LG.
17	4	·	622346	CONDUCTOR ASSY 2 1/8 LG
16	1	·	004700	SCREW ST. SLT. PAN HD 8 X 1 1/2
15	21"	·	800580	3/4" WIDE OKONITE RUBBER TAPE
14	4	·	019700	WASHER SPLIT LOCK 8 PLATED
13	4	·	642100	O-RING
12	4	·	675271	NUT
11	10	·	000101	TERMINALS T & B
10	4	·	636600	JUMPER
9	2	·	634401	TY-RAP CABLE TIE
8	1	·	800632-004	CONDUCTOR CABLE (27')
7	1	·	633801	CABLE ADAPTER
6	2	·	005101	SCREW ST. SLT. PAN HD 8 x 1 1/4
5	10	·	005001	SCREW ST. SLT. PAN HD 8 x 3/4
4	4	·	640302	BOOT-TOGGLE SWITCH
3	4	·	634200	TOGGLE SWITCH
2	1	·	631700	BOTTOM COVER
1	1	·	631601	PENDANT HOUSING

LIST OF MATERIAL

UNLESS OTHERWISE NOTED ALL DIMENSIONS ARE IN INCHES
TOLERANCES UNLESS OTHERWISE SPECIFIED
ANGLES ± 1/2° XX ± .040
FRACTIONAL ± 1/16 XXX ± .010
REMOVE ALL BURRS AND SHARP EDGES. DO NOT SCALE THIS DRAWING
TOLERANCES NOT SHOWN ABOVE ARE PER ANSI Y14.5-1973

THIS PRINT IS THE PROPERTY OF AUTO CRANE CO AND MUST NOT BE USED IN ANY MANNER DETRIMENTAL TO THEIR INTERESTS

NEXT ASS'Y

DRAWN BY RD
DATE 1-14-88
CHK'D BY
DATE
ENG BY
DATE

AUTO CRANE COMPANY
P.O. BOX 580697 • TULSA, OKLAHOMA 74158-0697
4707 NORTH MINGO ROAD • 918-836-0463

TITLE
PENDANT ASSEMBLY
4 FUNCTION, REMOVABLE

SCALE · SIZE C DRAWING NO AW-480800 REVISION ·
WEIGHT
SHEET 1 OF 1

CHG LTR	DESCRIPTION	DATE	APP'D
	REVISIONS		

81353

FIXTURE NO.	FINISH NO.

CHG LTR	REVISIONS DESCRIPTION	DATE	APPD

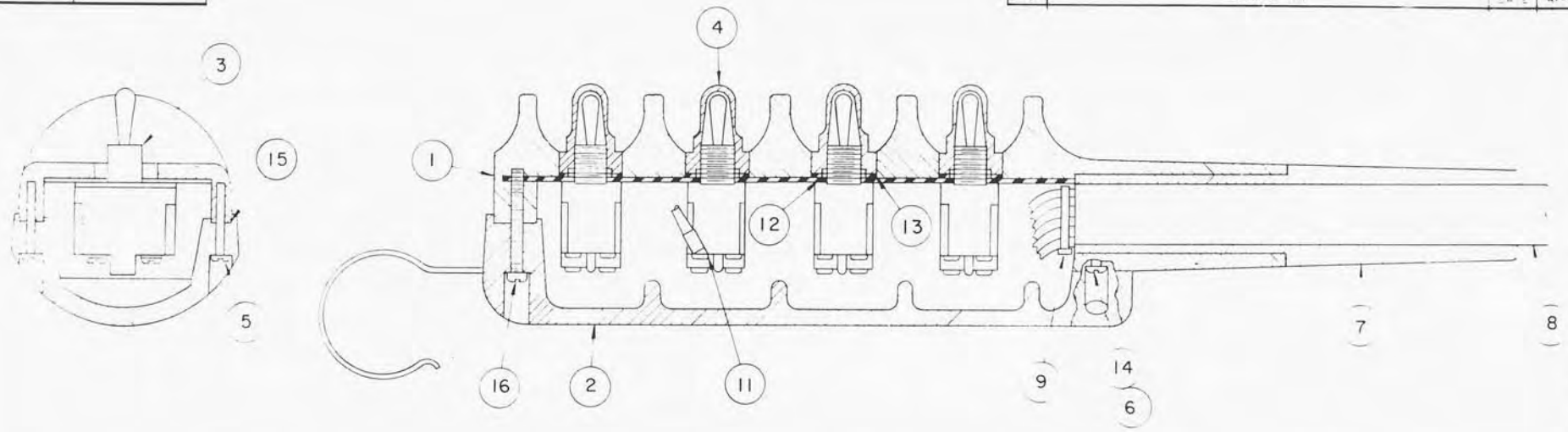

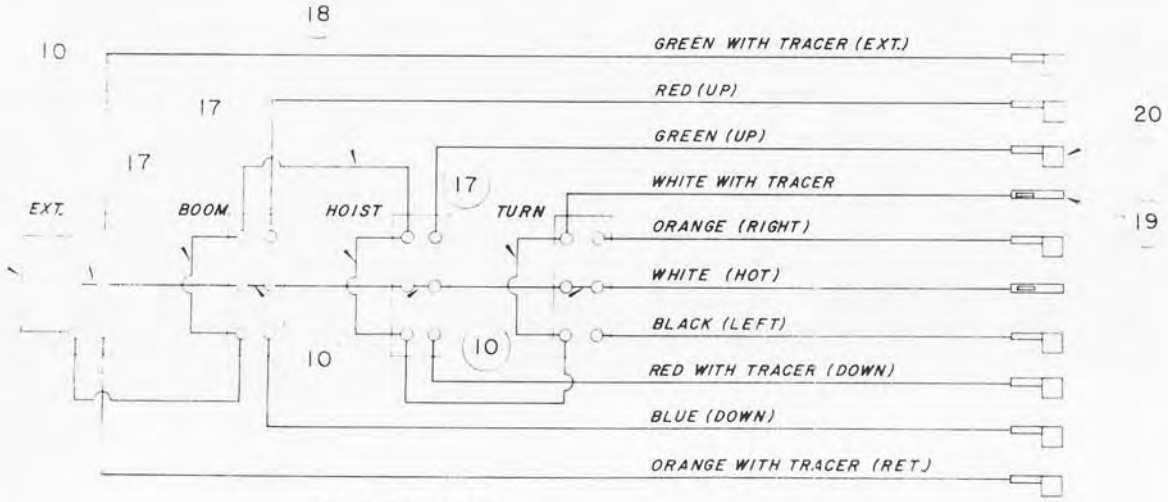

VIEW FROM BOTTOM

ITEM	QTY	PART NO	DESCRIPTION
20	8	000405	TERMINAL, FLAG (REF.) *
19	2	001102	SPLICE, BUTT (REF.) *
18	3	622347	CONDUCTOR ASS'Y 3 3/8" LG.
17	4	622346	CONDUCTOR ASS'Y 2 1/8" LG.
16	1	004700	SCREW, SLT. PAN HD. S.T. 8 X 1 1/2
15	21"	800580	3/4" WIDTH OKONITE RUBBER TAPE
14	4	019700	WASHER, SPLIT LOCK 8 PLATED
13	4	642100	O-RING
12	4	675271	NUT
11	30	000101	TERMINALS T & B
10	4	636600	JUMPER
9	2	634401	TY-RAP CABLE TIE
8	1	480697	CONDUCTOR CABLE (27') *
7	1	633801	CABLE ADAPTER
6	2	005101	SCREW, S.T.-SLT. PAN HD. #8 X 1 1/4
5	10	005001	SCREW, S.T.-SLT. PAN HD. #8 X 3/4
4	4	640302	BOOT-TOGGLE SWITCH
3	4	634200	TOGGLE SWITCH
2	1	631700	BOTTOM COVER
1	1	631601	PENDANT HOUSING

* NOTE:
WHEN ORDERING ITEM 8 (P/N 480697)
ITEMS 19 AND 20 ARE INCLUDED.

QUANTITY — LIST OF MATERIAL

UNLESS OTHERWISE NOTED ALL DIMENSIONS ARE IN INCHES
TOLERANCE
SPECIFY
ANGLES
FINISH
HEMS
EDGES
DRAFT
TOLERANCE
ARE IN
THIS PROD
AND MAY
MENTS

DRAWN R.B.D
1-2-86
CHECKED

AUTO CRANE COMPANY

PENDANT ASSEMBLY - 600SH

-	C	AW-480093

12/86

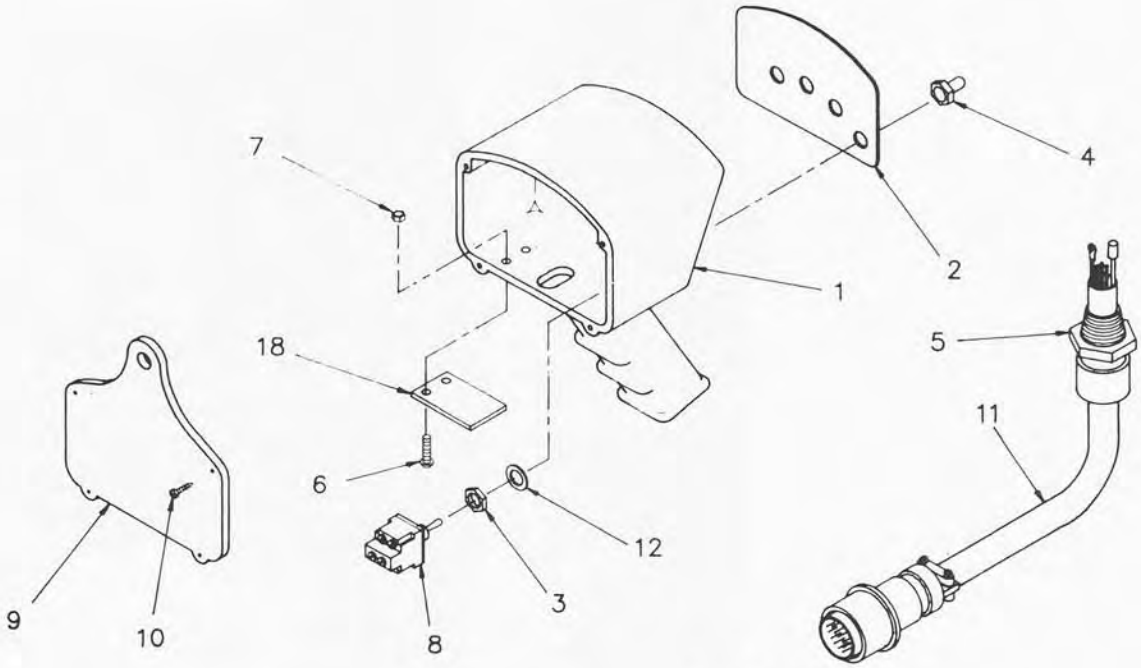

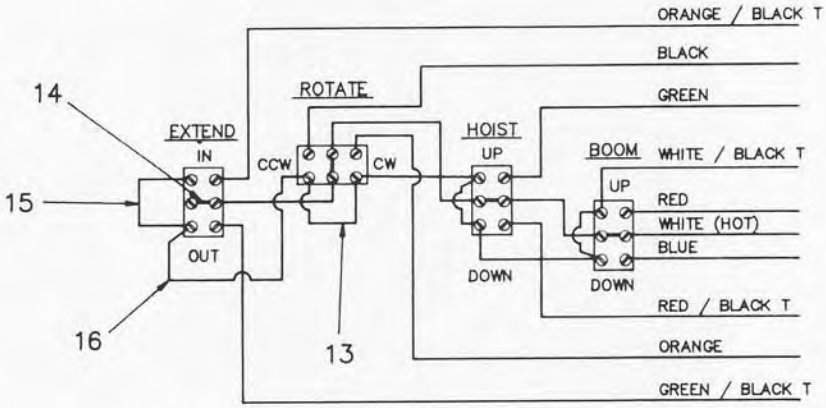

WIRING DIAGRAM

ITEM	QTY.	PART NO.	DESCRIPTION
1	1	480501	PENDANT HOUSING
2	1	480513	DECAL, COVER PLATE
3	4	REF.*	NUT
4	4	640300	BOOT, TOGGLE SWITCH
5	1	370433	CONNECTOR, HUBBEL F3
6	2	002607	SCREW, #10-24NC X 3/4
7	2	015801	NUT, HX. LK. #10-24NC
8	4	634200	SWITCH, TOGGLE DPDT
9	1	480504	BACK PLATE
10	4	480516	SCREW, S.T. RD. HD. #6 X 3/4
11	1	480595	CABLE ASSEMBLY
12	4	REF.*	WASHER, LK.
13	3	660302	CONDUCTOR ASSEMBLY
14	4	636600	JUMPER
15	4	622346	CONDUCTOR ASSEMBLY 2 1/8"
16	3	622347	CONDUCTOR ASSEMBLY 3 1/8"
17	2	750737	TIE, CABLE
18	1	480598	COVER, TRIGGER OPENING

* COMES WITH ITEM 8

AW-480590
PENDANT ASSEMBLY
FOUR FUNCTION, STANDARD

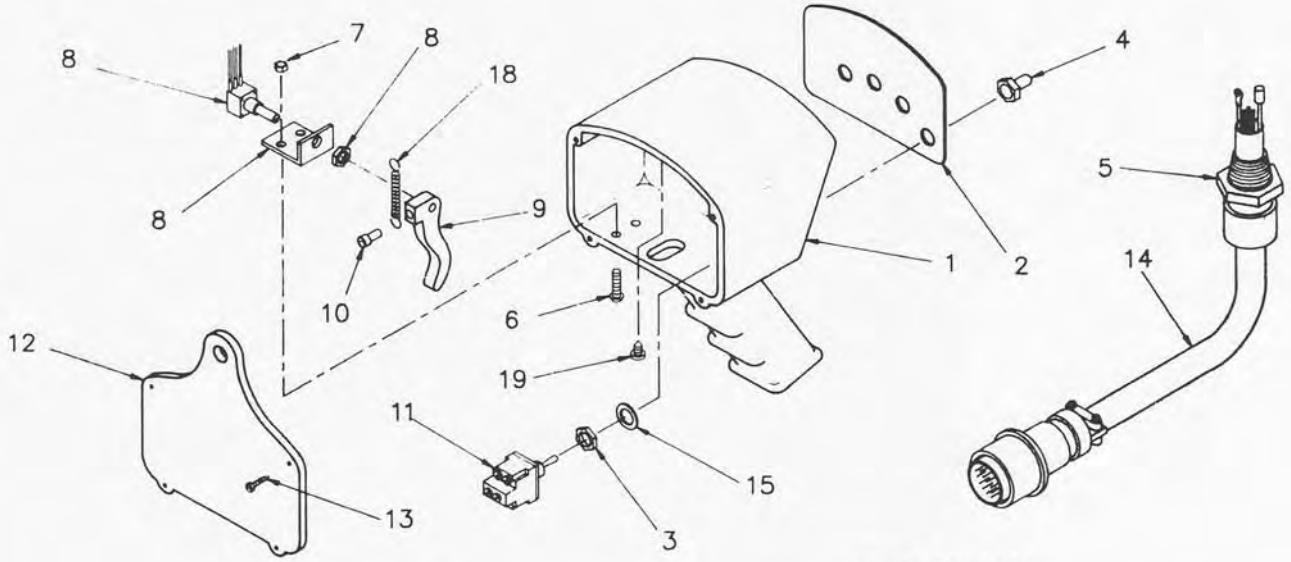

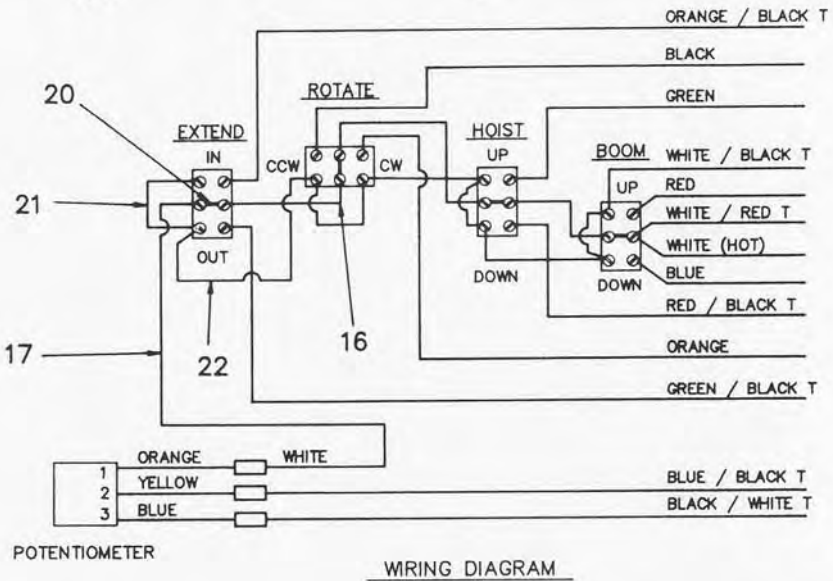

WIRING DIAGRAM

ITEM	QTY.	PART NO.	DESCRIPTION
1	1	480501	PENDANT HOUSING
2	1	480513	DECAL, COVER PLATE
3	4	REF.*	NUT
4	4	640300	BOOT, TOGGLE SWITCH
5	1	370433	CONNECTOR, HUBBEL F3
6	2	002607	SCREW, #10-24NC X 3/4
7	2	015801	NUT, HX. LK. #10-24NC
8	1	480507	POTENTIOMETER ASSEMBLY
9	1	480506	TRIGGER
10	1	480517	SCREW, SOC. HD. #10-32NF X 5/8
11	4	634200	SWITCH, TOGGLE
12	1	480504	BACK PLATE
13	4	480516	SCREW, S.T. RD. HD. #6 X 3/4
14	1	480596	CABLE ASSEMBLY
15	4	REF.*	WASHER, LK.
16	3	660302	CONDUCTOR ASSEMBLY
17	1	480524	CONDUCTOR ASSEMBLY
18	1	480523	SPRING, TRIGGER RETURN
19	1	005003	SCREW, PAN HD. S.T. #8 X 3/8
20	4	636600	JUMPER
21	4	622346	CONDUCTOR ASSEMBLY
22	3	622347	CONDUCTOR ASSEMBLY
23	2	750737	TIE, CABLE

* COMES WITH ITEM 11

AW-480591
PROPORTIONAL PENDANT ASSEMBLY
FOUR FUNCTION

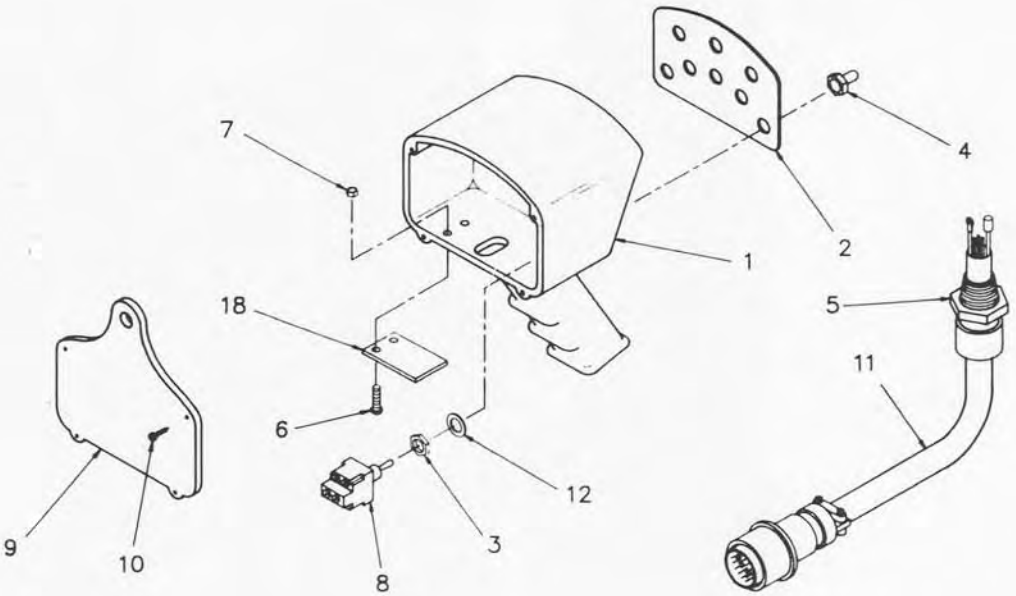

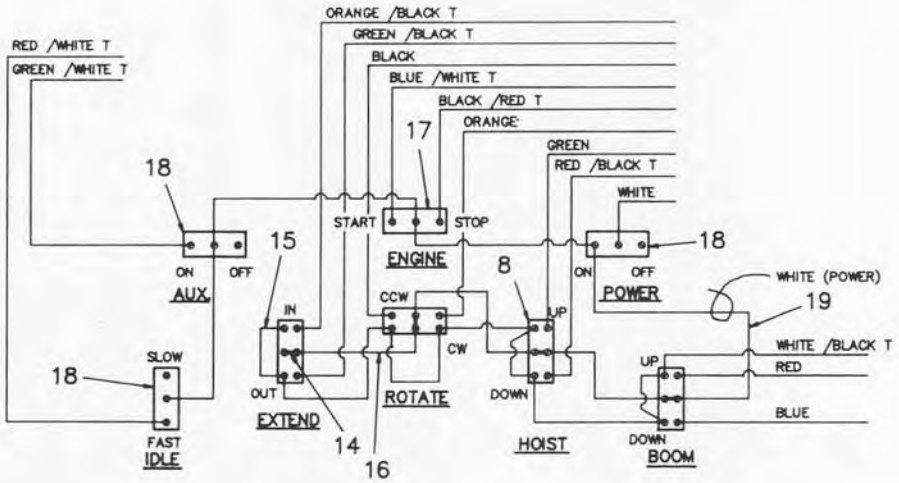

ITEM	QTY.	PART NO.	DESCRIPTION
1	1	480501	PENDANT HOUSING
2	1	480518	DECAL, COVER PLATE 8 FUNCTION
3	4	REF.	NUT
4	8	640300	BOOT, TOGGLE SWITCH
5	1	370433	CONNECTOR, HUBBEL F3
6	2	002607	SCREW, #10-24NC X 3/4
7	2	015801	NUT, HX. LK. #10-24NC
8	4	634200	SWITCH, TOGGLE DPDT
9	1	480504	BACK PLATE
10	4	480516	SCREW, S.T. RD HD #6 X 3/4
11	1	480588	CABLE ASSEMBLY

ITEM	QTY.	PART NO.	DESCRIPTION
12	8	REF.	WASHER, LOCK
13	3	660302	CONDUCTOR ASSEMBLY
14	4	636600	JUMPER
15	4	622346	CONDUCTOR ASSEMBLY
16	3	622347	CONDUCTOR ASSEMBLY
17	1	622000	SWITCH, TOGGLE SPDT
18	3	750090	SWITCH, TOGGLE ON/OFF
19	1	480526	CONDUCTOR ASSEMBLY
20	2	750737	TIE, CABLE
21	1	480598	COVER, TRIGGER OPENING

AW-480592
PENDANT ASSEMBLY
EIGHT FUNCTION, STANDARD

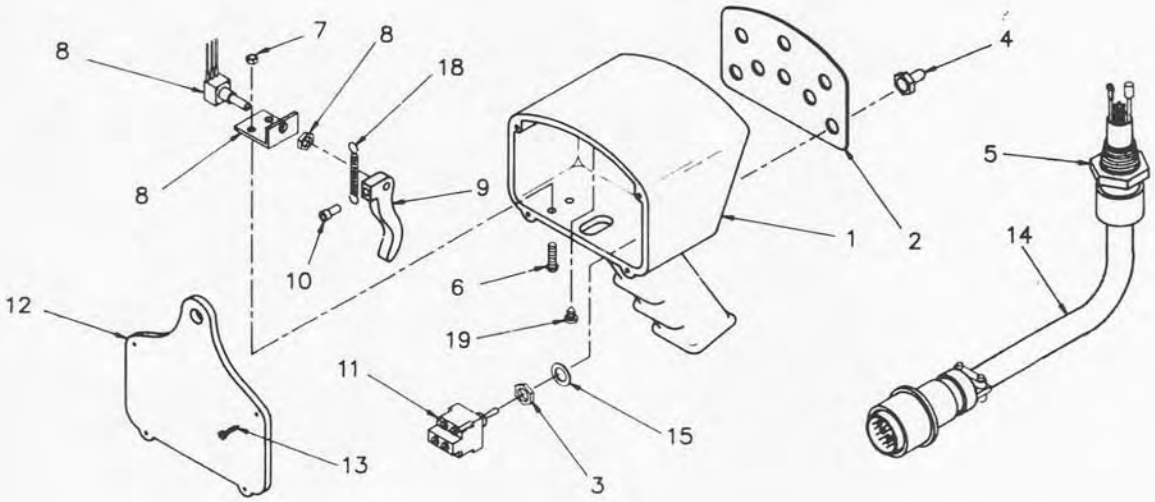

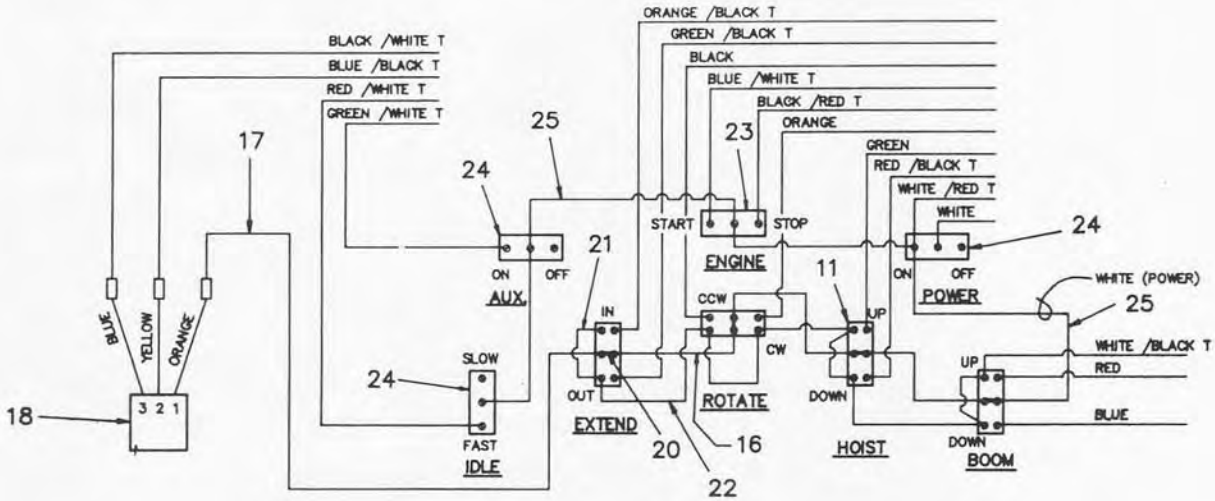

ITEM	QTY.	PART NO.	DESCRIPTION	ITEM	QTY.	PART NO.	DESCRIPTION
1	1	480501	PENDANT HOUSING	14	1	480589	CABLE ASSEMBLY
2	1	480518	DECAL, COVER PLATE 8 FUNCTION	15	8	REF.	WASHER, LOCK
3	8	REF.	NUT	16	3	660302	CONDUCTOR ASSEMBLY
4	8	640300	BOOT, TOGGLE SWITCH	17	1	480524	CONDUCTOR ASSEMBLY
5	1	370433	CONNECTOR, HUBBEL F3	18	1	480523	SPRING, TRIGGER RETURN
6	2	002607	SCREW, #10-24NC X 3/4	19	1	005003	SCREW, PAN HD S.T. #8 X 3/8
7	2	015801	NUT, HX. LK. #10-24NC	20	4	636600	JUMPER
8	1	480507	POTENTIOMETER ASSEMBLY	21	4	622346	CONDUCTOR ASSEMBLY
9	1	480506	TRIGGER	22	3	622347	CONDUCTOR ASSEMBLY
10	1	480517	SCREW, SOC. HD #10-32NF X 5/8	23	1	622000	SWITCH, TOGGLE SPDT
11	4	634200	SWITCH, TOGGLE DPDT	24	3	750090	SWITCH, TOGGLE ON/OFF
12	1	480504	BACK PLATE, HOUSING	25	1	480526	CONDUCTOR ASSEMBLY
13	4	480516	SCREW, S.T. RD HD #6 X 3/4	26	2	750737	TIE CABLE

AW-480593
PROPORTIONAL PENDANT ASSEMBLY
EIGHT FUNCTION

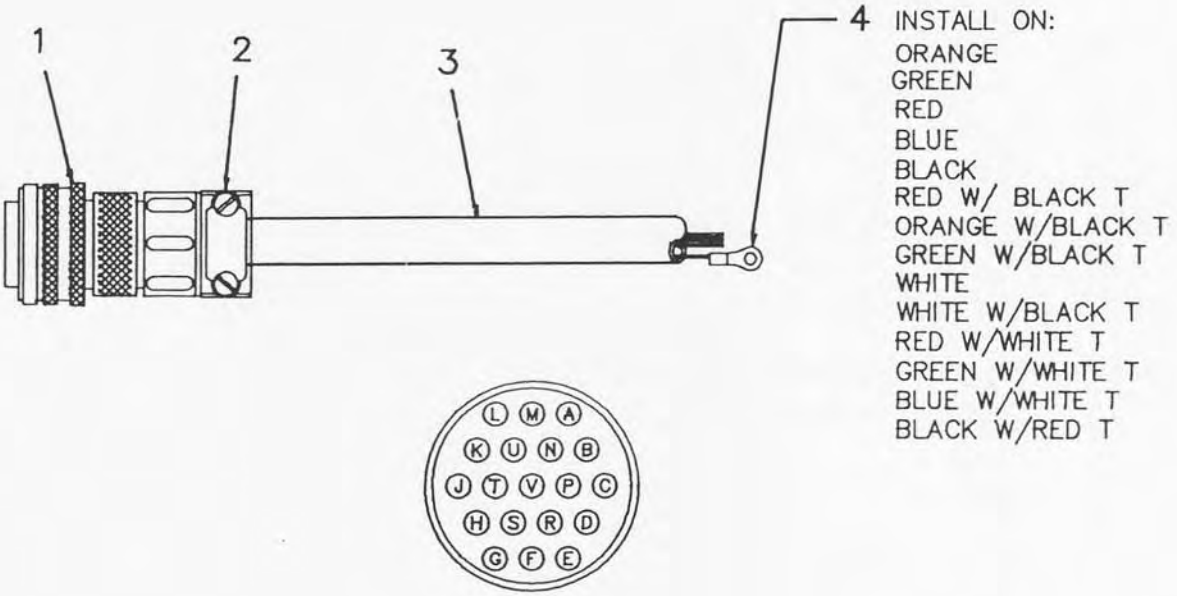

WIRING GUIDE

A–RED
B–GREEN
C–ORANGE
D–RED W/WHITE T
E–BLACK
F–RED W/BLACK T
G–BLUE
H–ORANGE W/BLACK T
J–GREEN W/BLACK T
K–WHITE W/BLACK T
L–WHITE
M–BLUE W/BLACK T
N–BLACK W/WHITE T
P–GREEN W/WHITE T
R–BLUE W/WHITE T
S–BLACK W/RED T
T–WHITE W/RED T
U–ORANGE W/RED T
V–BLUE W/RED T

ITEM	QTY.	PART NO.	DESCRIPTION
1	1	480514	PLUG, CONNECTOR
2	1	480515	CLAMP, CABLE
3	30'	480594–001	CABLE, CONDUCTOR (16/19)
4	14	000101	TERMINAL, RING

AW–480588
PENDANT CABLE ASSEMBLY

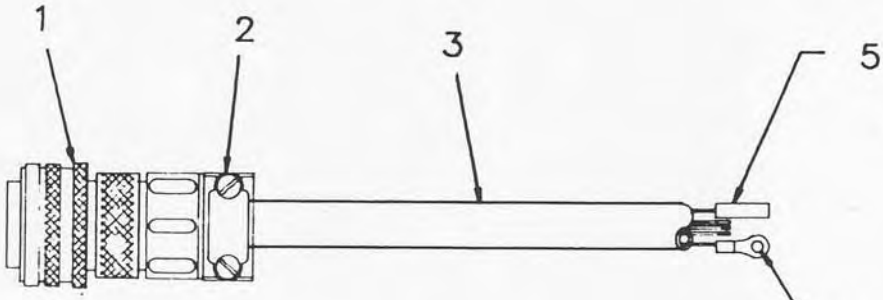

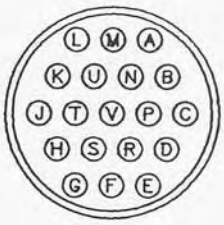

WIRING GUIDE

A–RED
B–GREEN
C–ORANGE
D–RED W/WHITE T
E–BLACK
F–RED W/BLACK T
G–BLUE
H–ORANGE W/BLACK T
J–GREEN W/BLACK T
K–WHITE W/BLACK T
L–WHITE
M–BLUE W/BLACK T
N–BLACK W/WHITE T
P–GREEN W/WHITE T
R–BLUE W/WHITE T
S–BLACK W/RED T
T–WHITE W/RED T
U–ORANGE W/RED T
V–BLUE W/RED T

ITEM	QTY.	PART NO.	DESCRIPTION
1	1	480514	PLUG, CONNECTOR
2	1	480515	CLAMP, CABLE
3	30'	480594–001	CABLE, CONDUCTOR (16/19)
4	15	000101	TERMINAL, RING
5	2	480510	BULLET CONNECTOR, FEMALE

AW–480589
PENDANT CABLE ASSEMBLY

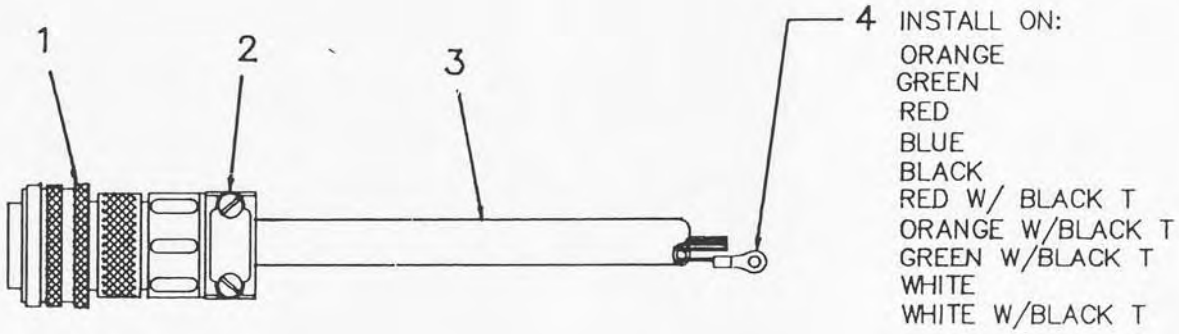

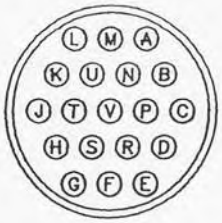

WIRING GUIDE

A–RED
B–GREEN
C–ORANGE
D–RED W/WHITE T
E–BLACK
F–RED W/BLACK T
G–BLUE
H–ORANGE W/BLACK T
J–GREEN W/BLACK T
K–WHITE W/BLACK T
L–WHITE
M–BLUE W/BLACK T
N–BLACK W/WHITE T
P–GREEN W/WHITE T
R–BLUE W/WHITE T
S–BLACK W/RED T
T–WHITE W/RED T
U–ORANGE W/RED T
V–BLUE W/RED T

ITEM	QTY.	PART NO.	DESCRIPTION
1	1	480514	PLUG, CONNECTOR
2	1	480515	CLAMP, CABLE
3	30'	480594–001	CABLE, CONDUCTOR (16/19)
4	9	000101	TERMINAL, RING

AW–480595
PENDANT CABLE ASSEMBLY

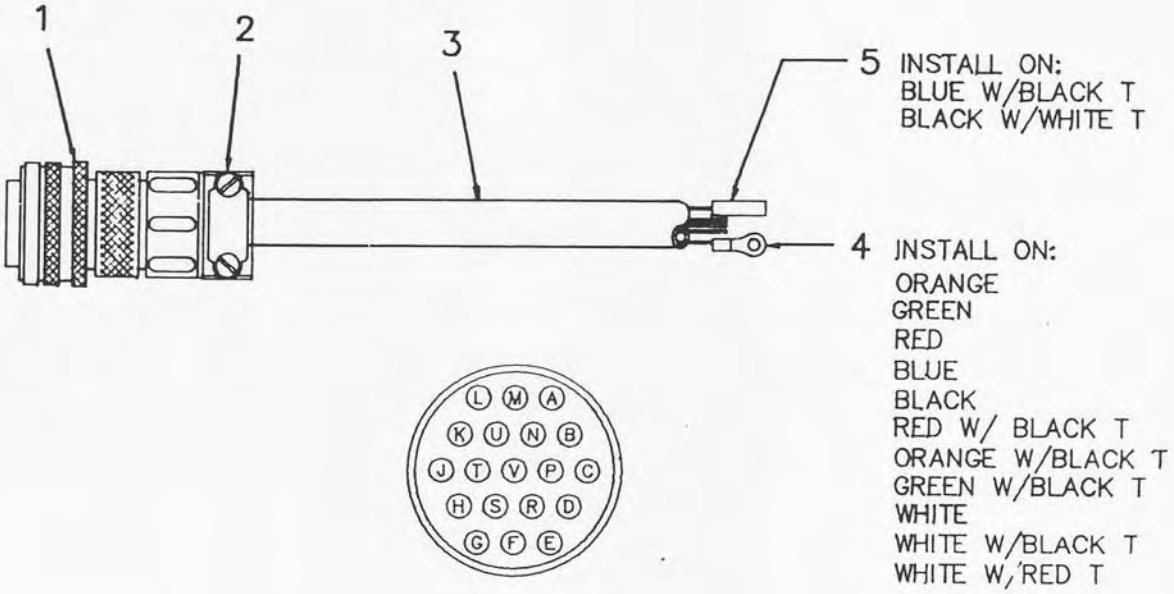

WIRING GUIDE

A–RED	L–WHITE
B–GREEN	M–BLUE W/BLACK T
C–ORANGE	N–BLACK W/WHITE T
D–RED W/WHITE T	P–GREEN W/WHITE T
E–BLACK	R–BLUE W/WHITE T
F–RED W/BLACK T	S–BLACK W/RED T
G–BLUE	T–WHITE W/RED T
H–ORANGE W/BLACK T	U–ORANGE W/RED T
J–GREEN W/BLACK T	V–BLUE W/RED T
K–WHITE W/BLACK T	

ITEM	QTY.	PART NO.	DESCRIPTION
1	1	480514	PLUG, CONNECTOR
2	1	480515	CLAMP, CABLE
3	30'	480594–001	CABLE, CONDUCTOR (16/19)
4	11	000101	TERMINAL, RING
5	2	480510	BULLET CONNECTOR, FEMALE

AW–480596
PENDANT CABLE ASSEMBLY

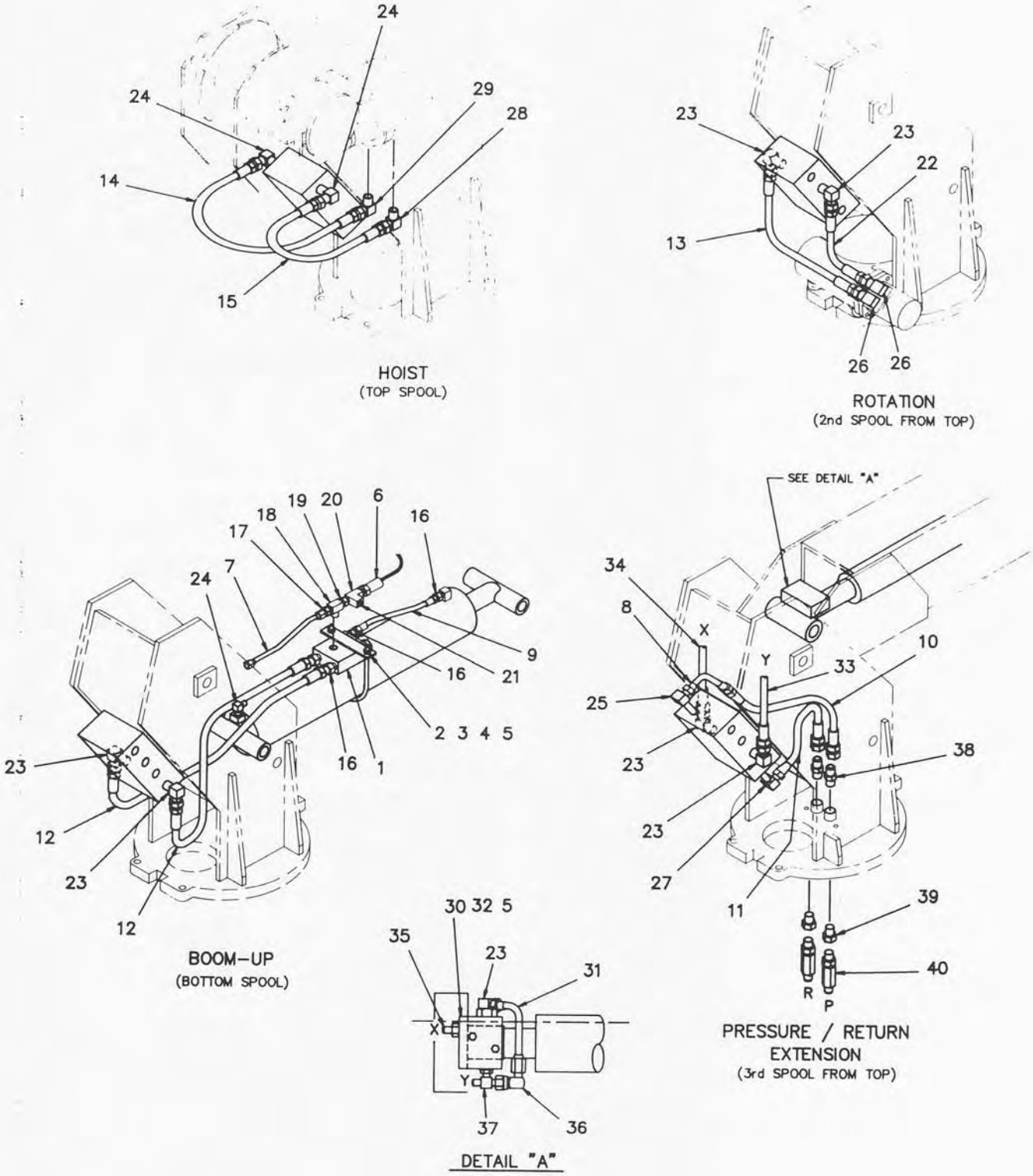

AW-016
HYDRAULIC ASSEMBLY

HYDRAULIC ASSEMBLY - 8005H - AW-016

ITEM	QTY.	PART NO.	DESCRIPTION
1	1	480187	VALVE, COUNTERBALANCE
2	1	480146	U-BOLT
3	1	480145	CLAMP
4	2	015900	NUT, HX 1/4 NC
5	4	020200	LOCKWASHER, 1/4
6	1	480043	LOAD SENSOR (REF.)
7	1	480210	TUBE ASS'Y
8	1	480211	TUBE ASS'Y
9	1	480209	HOSE ASS'Y
10	1	480200	HOSE ASS'Y (PRESSURE)
11	1	480201	HOSE ASS'Y (RETURN)
12	2	480208	HOSE ASS'Y (BOOM-UP 31-1/2")
13	1	480205	HOSE ASS'Y (ROTATION 19-1/4")
14	1	480203	HOSE ASS'Y (HOIST 24-3/4")
15	1	480202	HOSE ASS'Y (HOIST 21-1/2")
16	4	360042	ADAPTER 3/8 P/9/16 - 18 JIC
17	1	360040	ADAPTER 3/8 P/ 3/4 - 16 JIC
18	1	360053	TEE 3/8 P. FM RUN / 3/8 P. M
19	1	200880	BUSHING 3/8 P/ 1/4 P
20	1	480193	TEE 1/4 P EXT./ 1/4P INT.
21	1	000209	PLUG 1/4 PIPE
22	1	480204	HOSE ASS'Y (ROTATION 17-1/2")
23	7	200892	ELL 90° 3/8 P/ 9/16 - 18 JIC
24	3	360044	ELL 90° 3/8 P/ 3/4 - 16 JIC STD
25	1	480190	ELL 90° 3/8 P/ 3/4 - 16 JIC EXT LONG
26	2	202759	ELL 90° 1/2 P/ 9/16 - 18 JIC
27	1	480213	ELL 90° 3/8 P/ 3/4 - 16 JIC LONG
28	1	360043	ELL 90° 1/2 P/ 3/4 - 16 JIC STD
29	1	360045	ELL 90° 1/2 P/ 3/4 - 16 JIC MED. LONG
30	1	330412	VALVE, COUNTERBALANCE
31	1	480212	TUBE ASSEMBLY
32	2	005810	SCREW, HX. HD. 1/4 NC X 1 3/4" LONG
33	1	480207	HOSE ASSEMBLY
34	1	480206	HOSE ASSEMBLY
35	1	200876	ADAPTER, 0-RING
36	1	480194	ELL, 90° #6 JIC SWIVEL/ #6 JIC
37	1	241168	TEE, O-RING / 37° JIC
38	2	360054	ADAPTER
39	2	750413	REDUCER
40	2	750412	SWIVEL JOINT

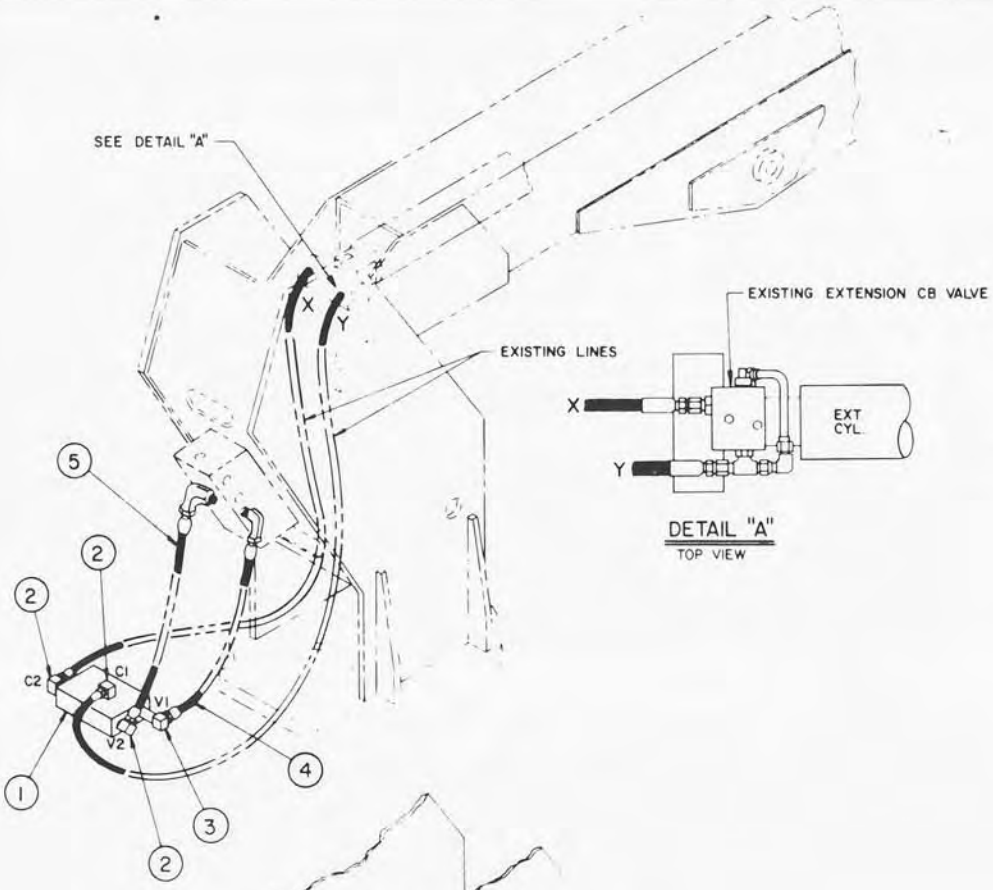

DETAIL "A"
TOP VIEW

NOTES:

1. FOR USE WHEN MANIFOLD RETURN LINE BACK PRESSURE EXCEEDS 100 PSI (TO ELIMINATE POSSIBLE BOOM OUT CREEP)
2. COUNTERBALANCE CARTRIDGE, SUN CBCA-LAN SET TO 4000 PSI WITH 3:1 PILOT RATIO
3. AFTER INSTALLATION, BOOM EXTEND PRESSURE WILL BE HIGHER

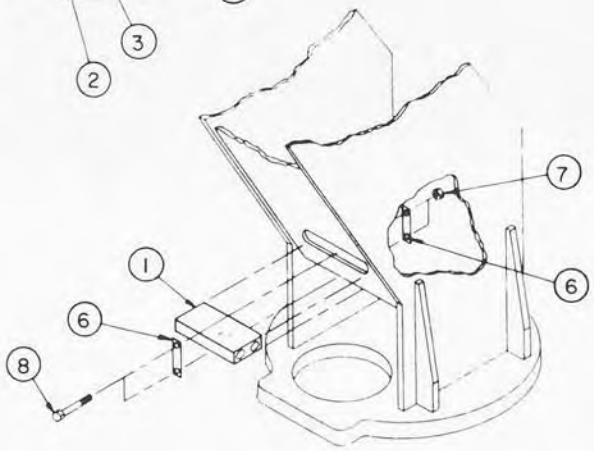

INSTALLATION & LOCATION OF COUNTERBALANCE VALVE

ITEM	QTY	D/S	PART NO	DESCRIPTION
8	2	A	007803	SCR. HX. HD 5/16-NC x 3 1/2 LG.
7	2	A	016801	NUT HEX-LOCK 5/16-NC
6	2	B	480218	CLAMP, COUNTERBALANCE VALVE
5	1	A	480204	HOSE ASS'Y
4	1	A	480204	HOSE ASS'Y
3	1	A	360046	90° ELL. LONG -6 NPT/-6 JIC
2	3	A	200892	90° ELL. -6 NPT/-6 JIC
1	1	A	480187	COUNTERBALANCE VALVE

LIST OF MATERIAL

UNLESS OTHERWISE NOTED ALL DIMENSIONS ARE IN INCHES
TOLERANCES UNLESS OTHERWISE SPECIFIED
ANGLES ± 1/2° | XX ± .040
FRACTIONAL ± 1/16 | XXX ± .010
REMOVE ALL BURRS AND SHARP EDGES. DO NOT SCALE THIS DRAWING
TOLERANCES NOT SHOWN ABOVE ARE PER ANSI Y14.5-1973

DRAWN BY L. Eubanks DATE 9-8-88
CHK'D BY [illegible] DATE 9-9-88
ENG BY [illegible] DATE 9-8-88

THIS PRINT IS THE PROPERTY OF AUTO CRANE CO AND MUST NOT BE USED IN ANY MANNER DETRIMENTAL TO THEIR INTERESTS.

NEXT ASS'Y

AUTO CRANE COMPANY
P.O. BOX 580697 • TULSA, OKLAHOMA 74158-0697
4707 NORTH MINGO ROAD • 918-836-0463

TITLE: COUNTERBALANCE KIT, "EXT. IN" FOR 8005H

SCALE | SIZE C | DRAWING NO AW-480219 | REVISION

WEIGHT | SHEET 1 OF 1

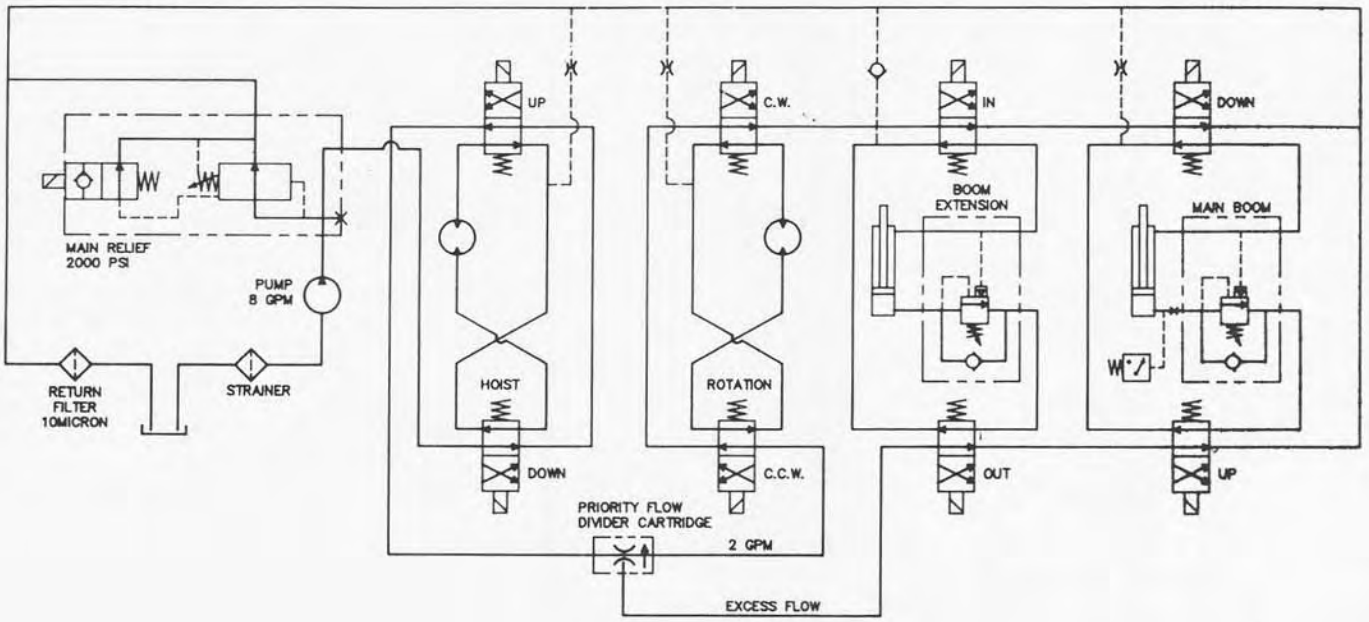

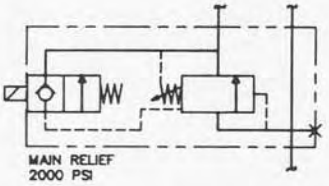

RELIEF VALVE SHOWN WITH SOLENOID ENERGIZED

AW–480653
8005H, HYDRAULIC SCHEMATIC

FIXTURE NO.	FINISH NO.

CHG LTR	REVISIONS DESCRIPTION	DATE	APP'D

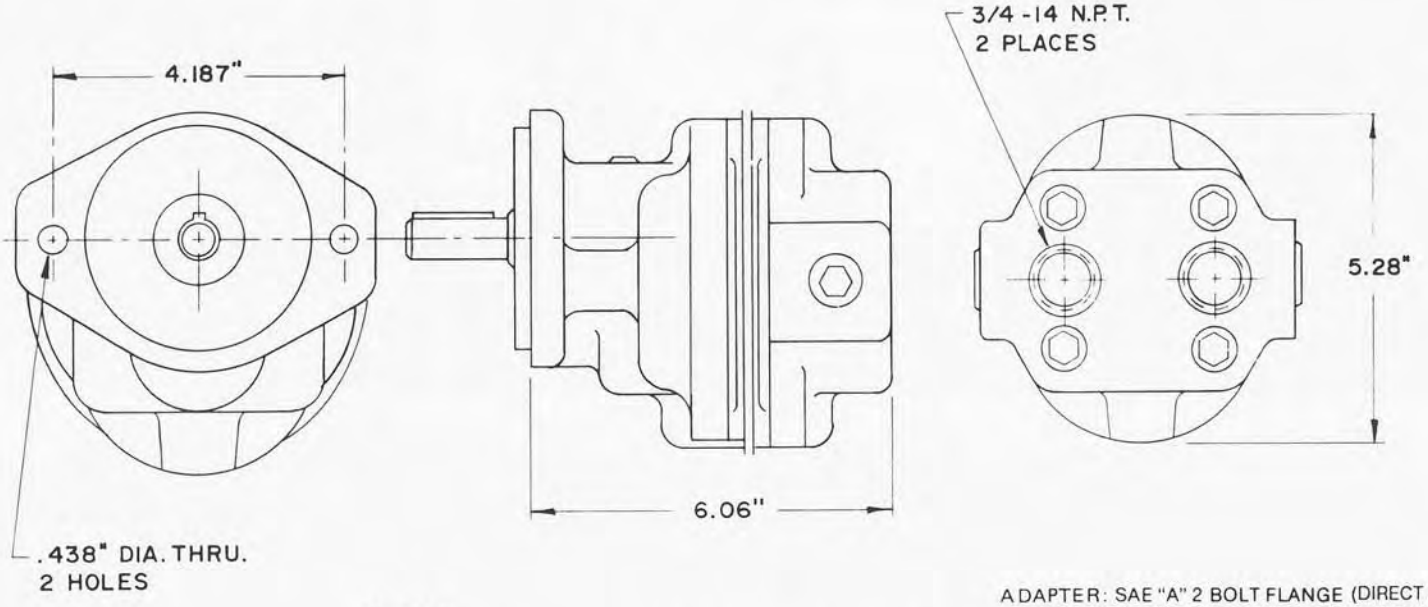

ADAPTER: SAE "A" 2 BOLT FLANGE (DIRECT MOUNT ONLY)
SHAFT: STRAIGHT SHAFT WITH KEY 3/4" DIA. 2-3/4" LONG 3/16" SQ. KEY 1-5/8" LONG.

NOTE:
PUMP SPEED-1000 R.P.M. (STANDARD)

NOTES:

1. TO ORDER HYD. PUMP ASSEMBLY USE PART NO. 480022, WHICH CONSISTS OF HYD. PUMP (480018), 3/4 14 NPT / 15/16- 12 JIC SUCTION ADAPTER (360055), AND 3/4-14 NPT / 1 1/16 -12 JIC PRESSURE ADAPTER (750399).
2. FOR SEAL KIT USE PART NO. 480018-001.
3. FOR SERVICE KIT USE PART NO. 480018-002.

ITEM	QTY	D/S	PART NO.	DESCRIPTION

LIST OF MATERIAL

UNLESS OTHERWISE NOTED ALL DIMENSIONS ARE IN INCHES.
TOLERANCES UNLESS OTHERWISE SPECIFIED.
ANGLES ± 1/2° | .XX ± .040
FRACTIONAL ± 1/16 | .XXX ± .010
REMOVE ALL BURRS AND SHARP EDGES. DO NOT SCALE THIS DRAWING.
TOLERANCES NOT SHOWN ABOVE ARE PER ANSI Y14.5-1973

DRAWN BY R. DAY
DATE 6-17-86
CHK'D BY
DATE
ENG. BY
DATE

AUTO CRANE COMPANY

TITLE
PUMP, HYDRAULIC - DIRECT MOUNT

SCALE ~ | SIZE B | DRAWING NO. AW-480018 | REVISION ~

WEIGHT | SHEET 1 OF 1

NEXT ASS'Y

THIS PRINT IS THE PROPERTY OF AUTO CRANE CO. AND MUST NOT BE USED IN ANY MANNER DETRIMENTAL TO THEIR INTERESTS.

3/89

6-4-0-0

01253

FIXTURE NO	FINISH NO.

CHG LTR	REVISIONS DESCRIPTION	DATE	APP'D

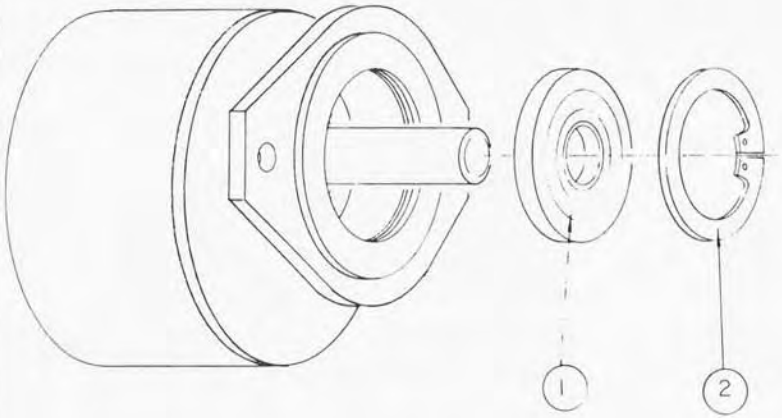

NOTE:

1. MAXIMUM NORMAL U-JOINT SHAFT OPERATING ANGLE - 10°.
2. MAXIMUM R.P.M. - 1500.
3. PUMP SHAFT AND P.T.O. SHAFT SHALL BE PARALLEL.
4. SLIDE BEARING OVER SHAFT.
5. WITH EVEN PRESSURE, SEAT BEARING.
6. INSTALL SNAP RING.

OUTBOARD BEARING KIT IS REQUIRED FOR DRIVE SHAFT MOUNTING!

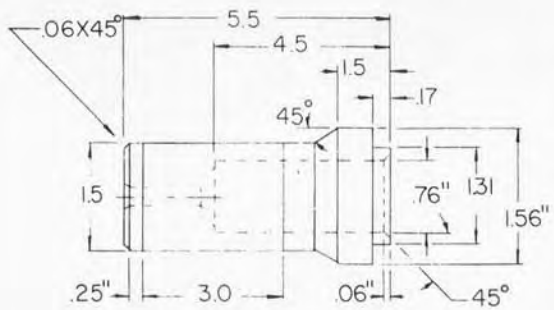

SUGGESTED OUTBOARD BEARING DRIVER DIMENSIONS

ITEM	D S	PART NO.	DESCRIPTION
1	2	A	480008	SNAP RING
1	1	A	480007	OUTBOARD BEARING

QUANTITY — LIST OF MATERIAL

UNLESS OTHERWISE NOTED ALL DIMENSIONS ARE IN INCHES. TOLERANCES UNLESS OTHERWISE SPECIFIED: ANGLES ± 1/2° | XX ± .40; FRACTIONAL ± 1/16 | XXX ± .010. REMOVE ALL BURRS AND SHARP EDGES. DO NOT SCALE THIS DRAWING. TOLERANCES NOT SHOWN ABOVE ARE PER ANSI Y14.5 1973

THIS PRINT IS THE PROPERTY OF AUTO CRANE CO. AND MUST NOT BE USED IN ANY MANNER DETRIMENTAL TO THEIR INTERESTS

NEXT ASS'Y

DRAWN BY GEUSMAN — DATE 4-29-87 — CHK'D BY — DATE — ENG BY — DATE 4-30-87

AUTO CRANE COMPANY
P.O. BOX 45548 • TULSA, OKLAHOMA 74145
9260 BROKEN ARROW EXPRESSWAY • 918-627-9475

TITLE: OUTBOARD BEARING KIT, PUMP

SCALE — | SIZE C | DRAWING NO. AW-480006 | REVISION —

WEIGHT | SHEET 1 OF 1

6-5-00

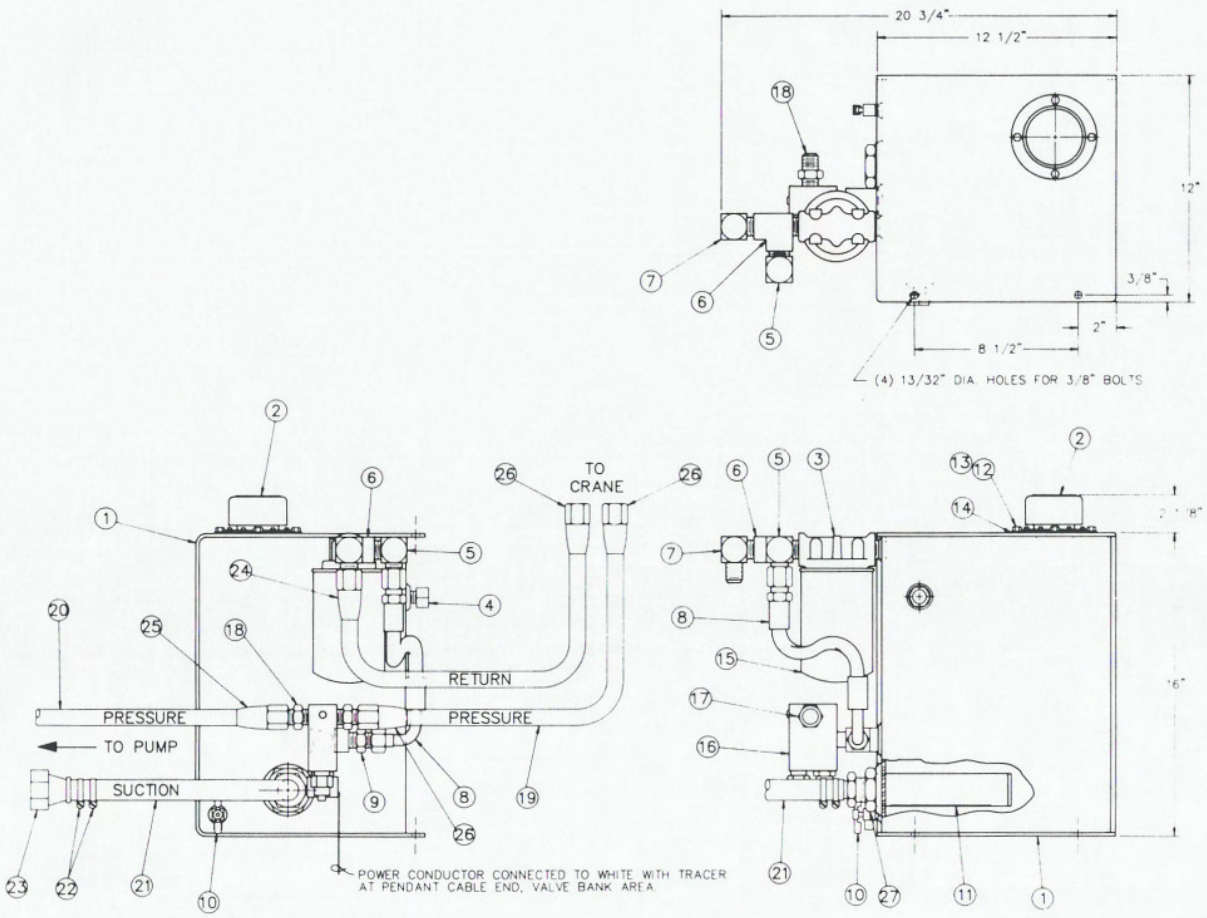

ITEM	QTY	D.S.	PART NO.	DESCRIPTION

LIST OF MATERIAL

UNLESS OTHERWISE NOTED ALL DIMENSIONS ARE IN INCHES
TOLERANCES UNLESS OTHERWISE SPECIFIED:
ANGLES ± 1/2° .XX ± .030
FRACTIONAL ± 1/16 .XXX ± .010
REMOVE ALL BURRS AND SHARP EDGES. DO NOT SCALE THIS DRAWING.
TOLERANCES NOT SHOWN ABOVE ARE PER ANSI Y14.5-1973

THIS PRINT IS THE PROPERTY OF AUTO CRANE CO. AND MUST NOT BE USED IN ANY MANNER DETRIMENTAL TO THEIR INTERESTS.

NEXT ASS'Y

DRAWN BY: RD
DATE: 2-2-89
CHK'D BY
DATE
ENG. BY
DATE

AUTO CRANE COMPANY
P.O. BOX 580887 • TULSA, OKLAHOMA 74158-0887
4701 NORTH MINGO ROAD • 918-836-0463

TITLE: RESERVOIR ASS'Y. 8 GALLON

SCALE: 3333 | SIZE: D | DRAWING NO. AW-480150 | REVISION: .

WEIGHT | SHEET 1 OF 1

CHG LTR	DESCRIPTION	DATE	APP'D
	REVISIONS		

0099

RESERVOIR ASSEMBLY, 8005H, AW-480150

ITEM	QTY.	PART NO.	DESCRIPTION
1	1	480151	RESERVOIR WELDMENT
2	1	360151	FILLER ASSEMBLY
3	1	360156	FILTER ASSEMBLY
4	1	360150	SIGHT PLUG
5	1	551222	ELL
6	1	360262	TEE
7	1	360263	ELL
8	1	360284	HOSE ASSEMBLY
9	1	360054	ADAPTER, STRAIGHT
10	1	750715	DRAIN VALVE
11	1	360282	STRAINER, SUCTION
12	4	005500	SCREW, HX. 1/4-20 X 3/4"
13	4	020200	WASHER, 1/4 SP. LK.
14	1	360249	COVER, CLEAN OUT
15	1	360277	SPIN ON FILTER (FOR REPLACEMENT)
16	1	REF.	VENTED RELIEF VALVE ASSEMBLY (360247)
17	1	REF.	ADAPTER, STRAIGHT (360054)
18	1	REF.	ADAPTER, STRAIGHT (551215)
19	1	REF.	HOSE, -8 (551228-001)
20	1	REF.	HOSE, -12 (360274-001)
21	1	REF.	HOSE, -16 (360275-001)
22	4	REF.	HOSE CLAMP, -16 (360268)
23	1	REF.	HOSE ADAPTER (360273)
24	1	REF.	FITTING, REUSABLE 10-8 (551227)
25	2	REF.	FITTING, REUSABLE 10-12 (360269)
26	3	REF.	FITTING, REUSABLE 8-8 (360266)
27	1	REF.	ADAPTER, STRAIGHT (360270)

NOTES:

1. ITEMS 17 THRU 27 ARE AVAILABLE AS A KIT, PART NO. 480159

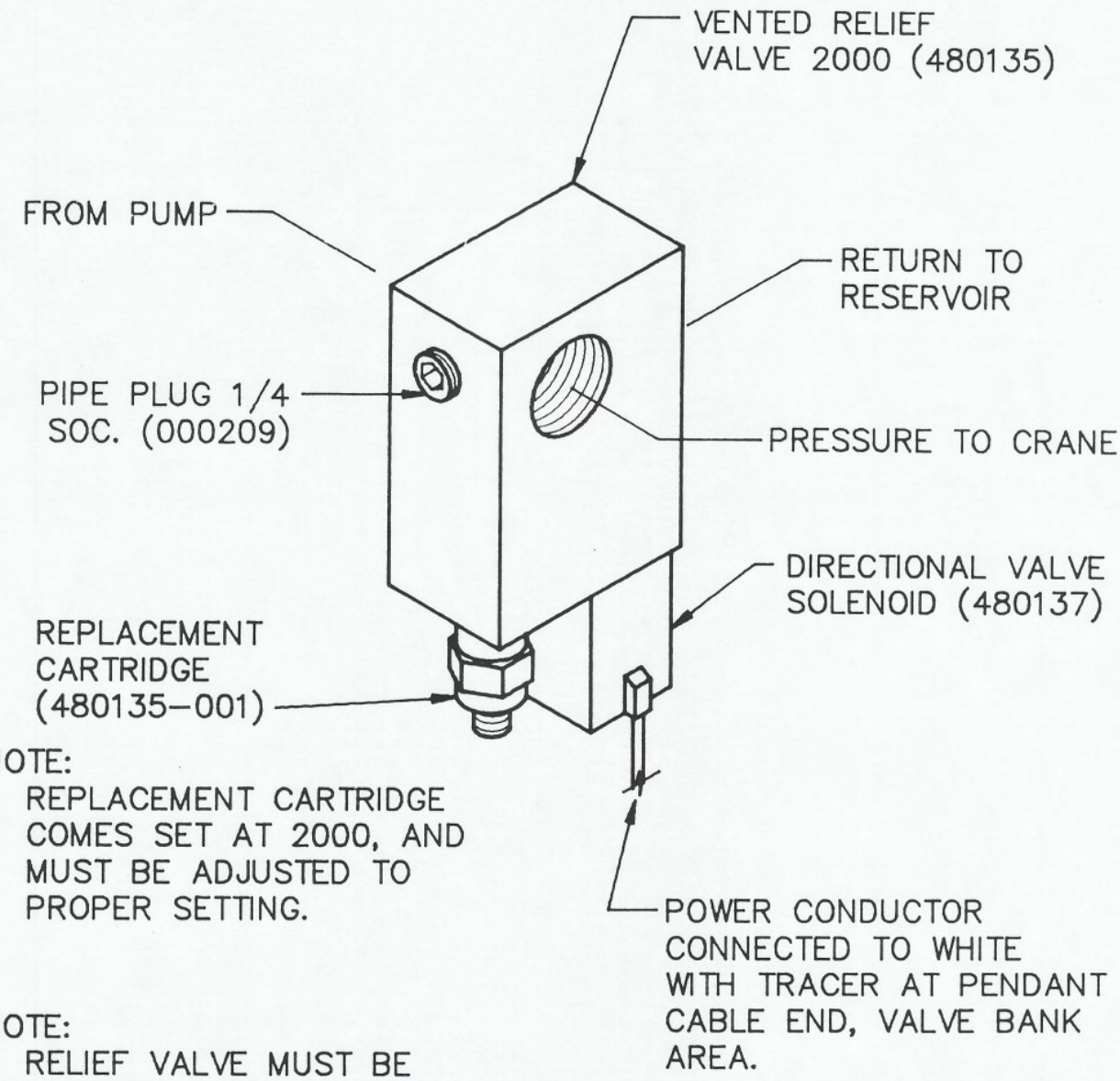

NOTE:
REPLACEMENT CARTRIDGE COMES SET AT 2000, AND MUST BE ADJUSTED TO PROPER SETTING.

NOTE:
RELIEF VALVE MUST BE LOCATED BETWEEN PUMP AND ANY OTHER VALVES AND ACCESSORIES.

VENTED RELIEF VALVE ASSEMBLY, WITH SOLENOID

PART NO. 480157

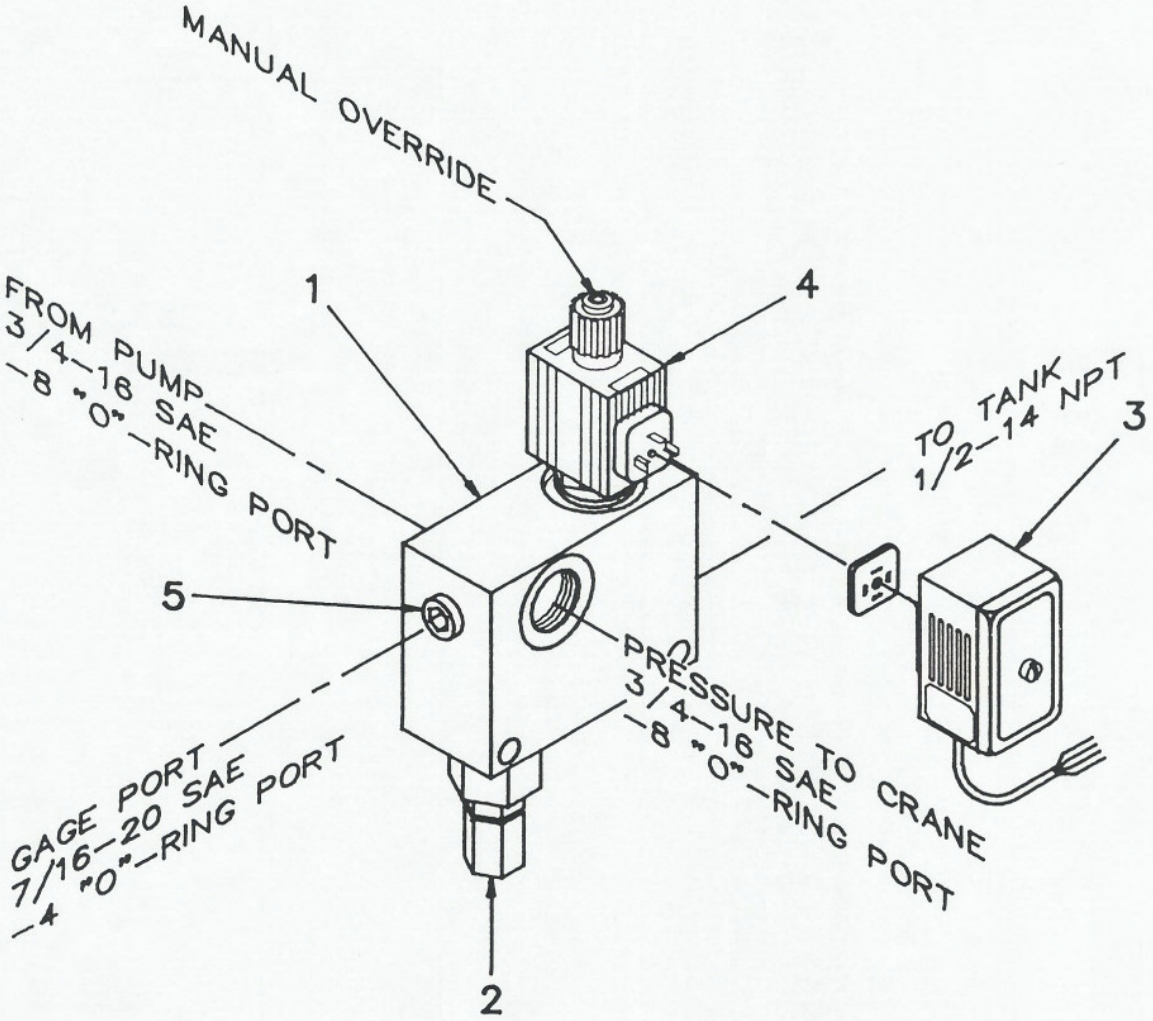

ITEM	QTY.	PART NO.	DESCRIPTION
1	1	480521	MANIFOLD, BLOCK
2	1	360157-002	RELIEF VALVE
3	1	480522	INTIGRATED AMPLIFIER (IN SHIP KIT)
4	1	480520	SOLENOID VALVE
5	1	000211	PLUG, -4 SAE "O"-RING

AW-480525
MANIFOLD ASSEMBLY

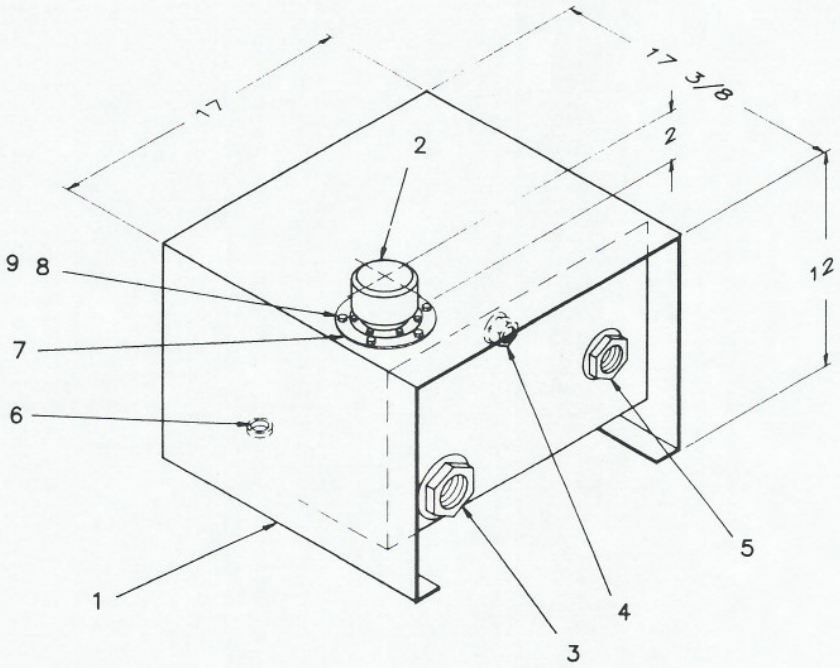

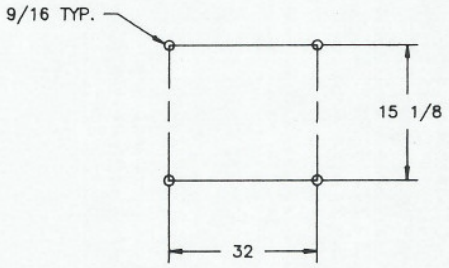

MOUNTING PATTERN

ITEM	QTY.	PART NO.	DESCRIPTION
1	1	750501	RESERVOIR WELD ASSEMBLY
2	1	360151	FILLER ASSEMBLY
3	1	360282	STRAINER, SUCTION
4	1	360150	SIGHT GLASS
5	1	750708	STRAINER, DIFFUSER
6	1	750477	PIPE PLUG, 1/2-14
7	1	360249	COVER, CLEAN OUT
8	4	005500	SCREW, HX. HD. 1/4-20 X 3/4
9	4	020200	WASHER, SP. LK. 1/4

AW-750500
9 GALLON RESERVOIR

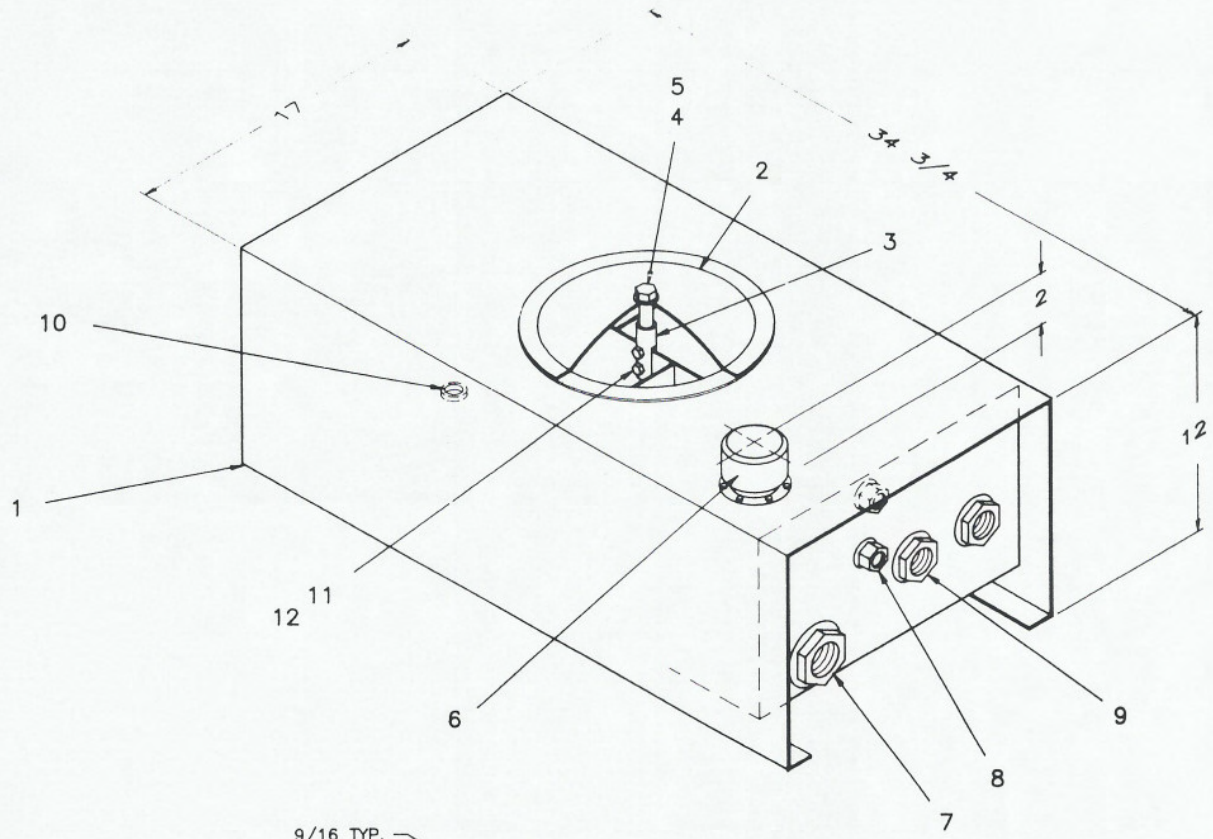

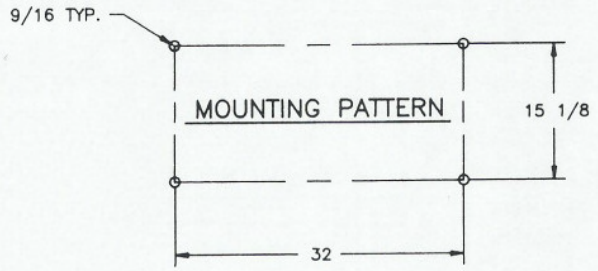

ITEM	QTY.	PART NO.	DESCRIPTION
1	1	750691	RESERVOIR WELD ASSEMBLY
2	1	750712	COVER
3	1	750709	ADAPTER, BAFFLE
4	1	750716	CRUSH WASHER
5	1	750711	BOLT, END COVER
6	1	360151	FILLER ASSEMBLY
7	1	750707	STRAINER, SUCTION
8	2	360150	SIGHT PLUG
9	2	750708	STRAINER, DIFFUSER
10	1	750477	PIPE PLUG, 1/2-14
11	2	009108	SCREW, HX. HD 3/8-NC X 1 1/4
12	2	017400	NUT, HX. LK. 3/8-NC

AW-750690
18 GALLON RESERVOIR

FIXTURE NO	FINISH NO

CHG LTR	REVISIONS DESCRIPTION	DATE	APP'D

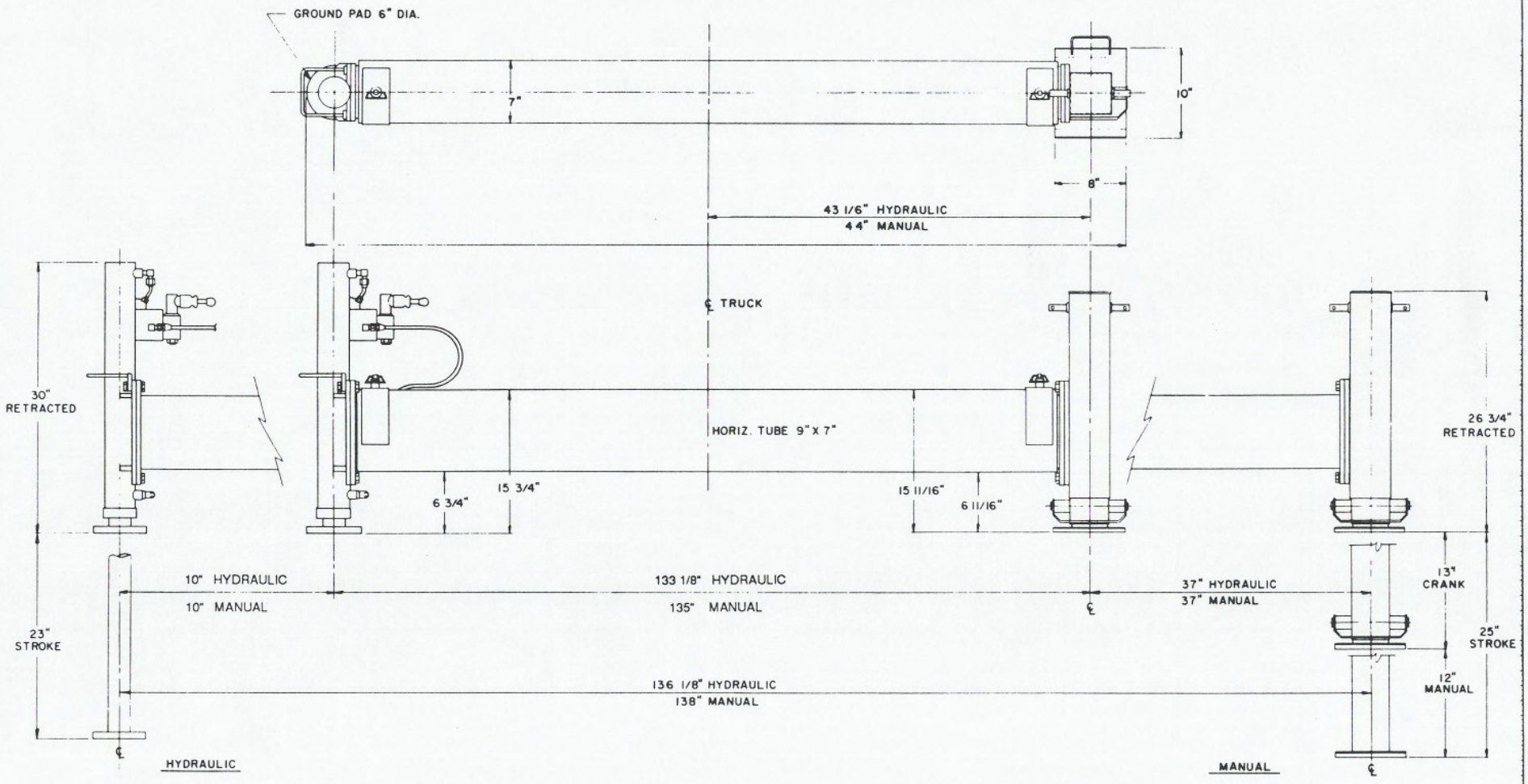

ITEM	D-S	PART NO	DESCRIPTION
QUANTITY			LIST OF MATERIAL

UNLESS OTHERWISE NOTED ALL DIMENSIONS ARE IN INCHES
TOLERANCES UNLESS OTHERWISE SPECIFIED
ANGLES ± 1/2° | XX ± .40
FRACTIONAL ± 1/16 | XXX ± .010
REMOVE ALL BURRS AND SHARP EDGES. DO NOT SCALE THIS DRAWING
TOLERANCES NOT SHOWN ABOVE ARE PER ANSI Y14.5 1973

THIS PRINT IS THE PROPERTY OF AUTO CRANE CO AND MUST NOT BE USED IN ANY MANNER DETRIMENTAL TO THEIR INTERESTS

NEXT ASS'Y

DRAWN BY
DATE
CHK'D BY
DATE
DATE

AUTO CRANE COMPANY

TITLE
DIMENSIONAL OUTRIGGERS
HYDRAULIC & MANUAL

SCALE	SIZE	DRAWING NO	REVISION
~	D	ENG. 164	

WEIGHT

SHEET 1 OF 1

3/89

7-100

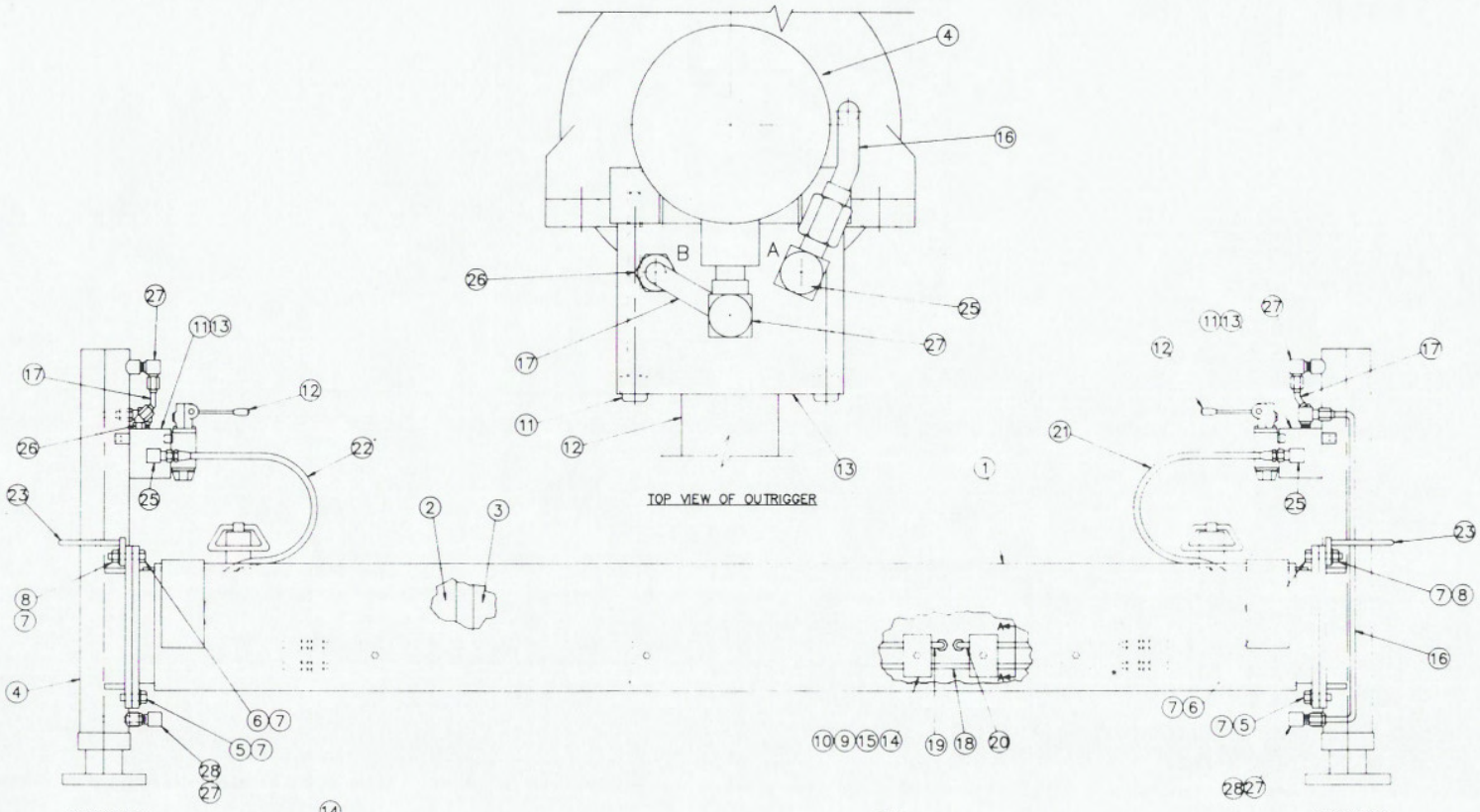

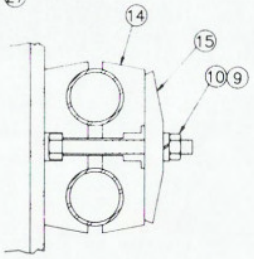

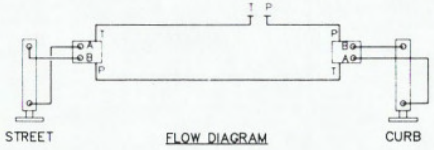

NOTE

(a) MANUAL VALVE LEVER- PUSH DOWN TO EXTEND CYL.

(b) MANUAL VALVE LEVER- PULL UP TO RETRACT CYL.

ITEM	QTY	D-S	PART NO	DESCRIPTION
				LIST OF MATERIAL

CHG LTR	DESCRIPTION	DATE	APP'D
	REVISIONS		

UNLESS OTHERWISE NOTED ALL DIMENSIONS ARE IN INCHES
TOLERANCES UNLESS OTHERWISE SPECIFIED
ANGLES ± 1/2° XX ± .040
FRACTIONAL ± 1/16 XXX ± .010
REMOVE ALL BURRS AND SHARP EDGES DO NOT SCALE THIS DRAWING
TOLERANCES NOT SHOWN ABOVE ARE PER ANSI Y14.5-1973

THIS PRINT IS THE PROPERTY OF AUTO CRANE CO AND MUST NOT BE USED IN ANY MANNER DETRIMENTAL TO THEIR INTERESTS

NEXT ASS'Y

DRAWN BY NO
DATE 7-24-88
CHK'D BY
DATE
ENG. BY
DATE

AUTO CRANE COMPANY
P.O. BOX 580887 • TULSA, OKLAHOMA 74158-0887
4707 NORTH MINGO ROAD • 918-836-0463

TITLE
HYD. OUTRIGGER ASS'Y

SCALE 25=1" | SIZE D | DRAWING NO AW-480300 | REVISION 1
WEIGHT | SHEET 1 OF 1

7-200

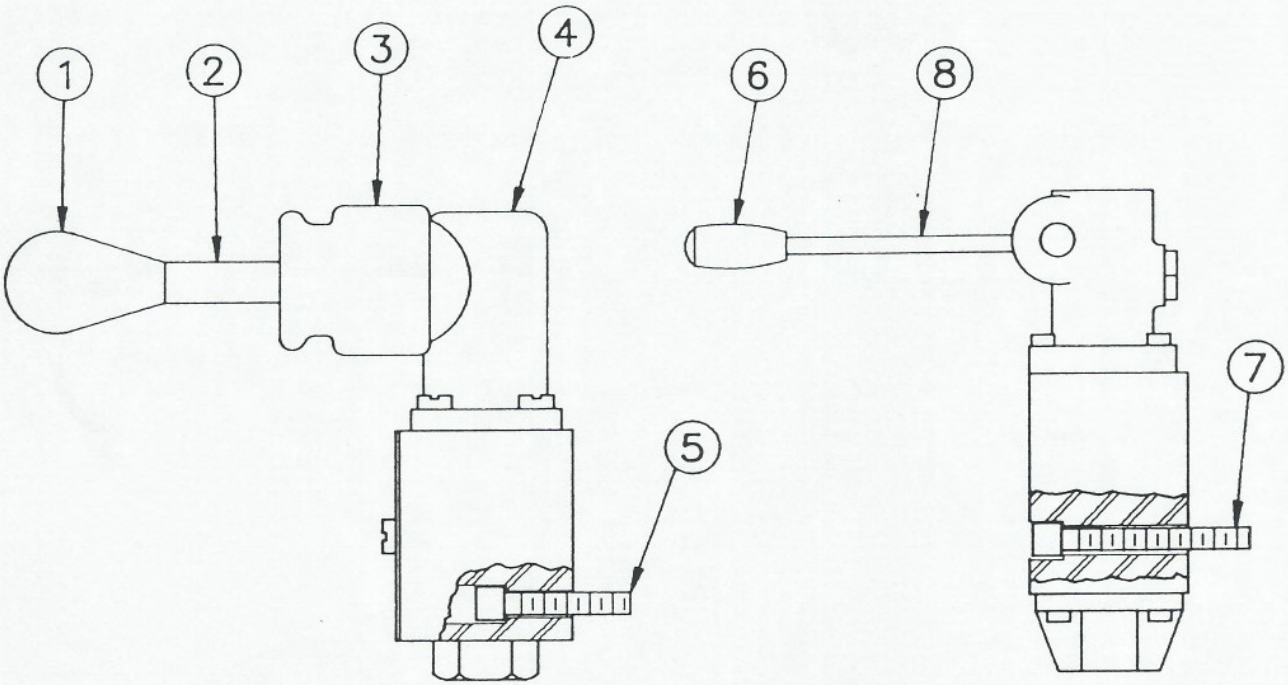

CONTINENTAL

REXROTH

SEAL KIT (CONTINENTAL)
480230–009

SEAL KITS (REXROTH)
480230–010, BUNA (LOW TEMP)
480230–011, VITA (HIGH TEMP.)

AW–073. OUTRIGGER VALVE (PART NO. 480230)

OUTRIGGER VALVE, AW-073

ITEM	QTY.	PART NO.	DESCRIPTION
1	1	480230-001	KNOB
2	1	480230-002	LEVER ASS'Y
3	1	480230-003	BOOT
4	1	480230-004	HOUSING, ASS'Y
5	1	480230-005	BOLT KIT (4 SOC. HD. SCREWS #10 - 24 X 7/8)
6	1	480230-006	KNOB
7	1	480230-007	BOLT KIT(4, SOC. HD. SCREWS #10 - 24 X 2" LG)
8	1	480230-008	LEVER ASS'Y

HYD. OUTRIGGER ASS'Y, AW-480300

ITEM	QTY.	PART NO.	DESCRIPTION
1	1	750899	MAIN CROSS TUBE
2	1	750893	SLIDE, STREET SIDE
3	1	750894	SLIDE, CURB SIDE
4	2	480017	CYLINDER, VERTICAL
5	4	012203	SCREW, HX. HD. 5/8 - NF X 1 1/4
6	4	013506	SCREW, HX. HD. 5/8 - NF X 2 1/4
7	12	023800	WASHER, SP. LK. 5/8
8	4	018302	NUT, HX. 5/8 - NF
9	5	016500	NUT, HX. 5/16 - NC
10	5	020600	WASHER, SP. LK. 5/16
11	4	003906	SCREW SOC. HD. 5/16 - 18 NC X 3 1/4
12	2	480230	VALVE MANUAL, OUTRIGGER (VERTICAL)
13	2	480231	MANIFOLD, OUTRIGGER
14	5	480232	CLAMP, HALVES
15	5	480233	PLATE, TWIN COVER
16	2	480220	TUBE ASS'Y (LEG)
17	2	480221	TUBE ASS'Y (LEG)
18	1	480222	TUBE ASS'Y
19	1	480223	TUBE ASS'Y
20	1	480224	TUBE ASS'Y
21	2	480225	HOSE ASS'Y O.R. (CURB SIDE)
22	2	480226	HOSE ASS'Y O.R. (STREET SIDE)
23	2	480227	HANDLE ASS'Y
24	1	480235	KIT, OUTRIGGER INSTALLATION
25	6	241175	ELL, 90°, -6 ORB/ -6 JIC
26	2	480195	ELL, 45°, -6 ORB/ -6 JIC
27	4	200892	ELL, 90°, 3/8 NP/ -6 JIC
28	2	360048	ELL, 90°, -6 NPT/ -6 NPTF
29	1	480014	SEAL KIT (FOR CYL. 480017)

3/89

FIXTURE NO.	FINISH NO.

CHG LTR	REVISIONS DESCRIPTION	DATE	APP'D

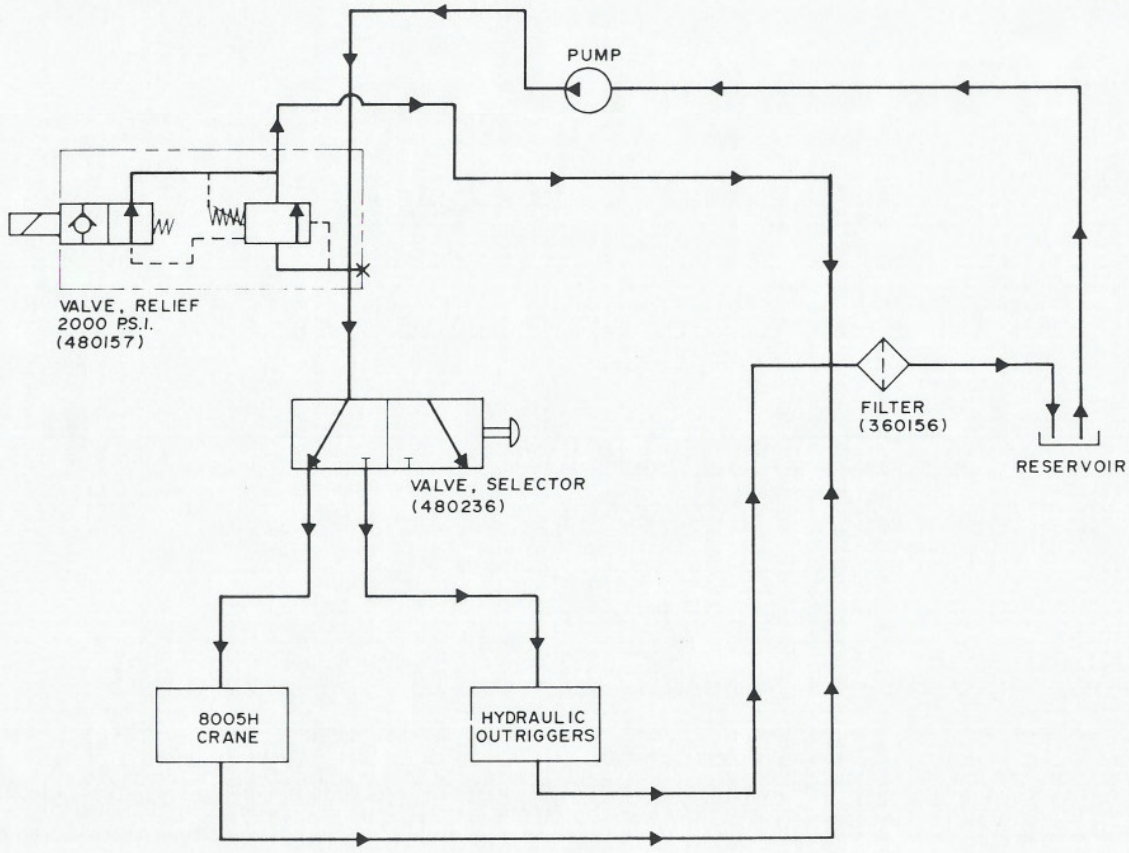

ITEM	D S	PART NO.	DESCRIPTION
QUANTITY		LIST OF MATERIAL	

UNLESS OTHERWISE NOTED ALL DIMENSIONS ARE IN INCHES. TOLERANCES UNLESS OTHERWISE SPECIFIED
ANGLES ± 1/2° | XX ± .40
FRACTIONAL ± 1/16 | XXX ± .010
REMOVE ALL BURRS AND SHARP EDGES. DO NOT SCALE THIS DRAWING.
TOLERANCES NOT SHOWN ABOVE ARE PER ANSI Y14.5 1973

THIS PRINT IS THE PROPERTY OF AUTO CRANE CO. AND MUST NOT BE USED IN ANY MANNER DETRIMENTAL TO THEIR INTERESTS.

NEXT ASS'Y

DRAWN BY R.D. | DATE 7/16/86 | CHK'D BY | DATE | ENG. BY | DATE

AUTO CRANE COMPANY

TITLE
HYDRAULIC SCHEMATIC
8005H
WITH HYDRAULIC OUTRIGGERS

SCALE	SIZE	DRAWING NO.	REVISION
~	C	AW-480170	~

WEIGHT | SHEET 2 OF 2

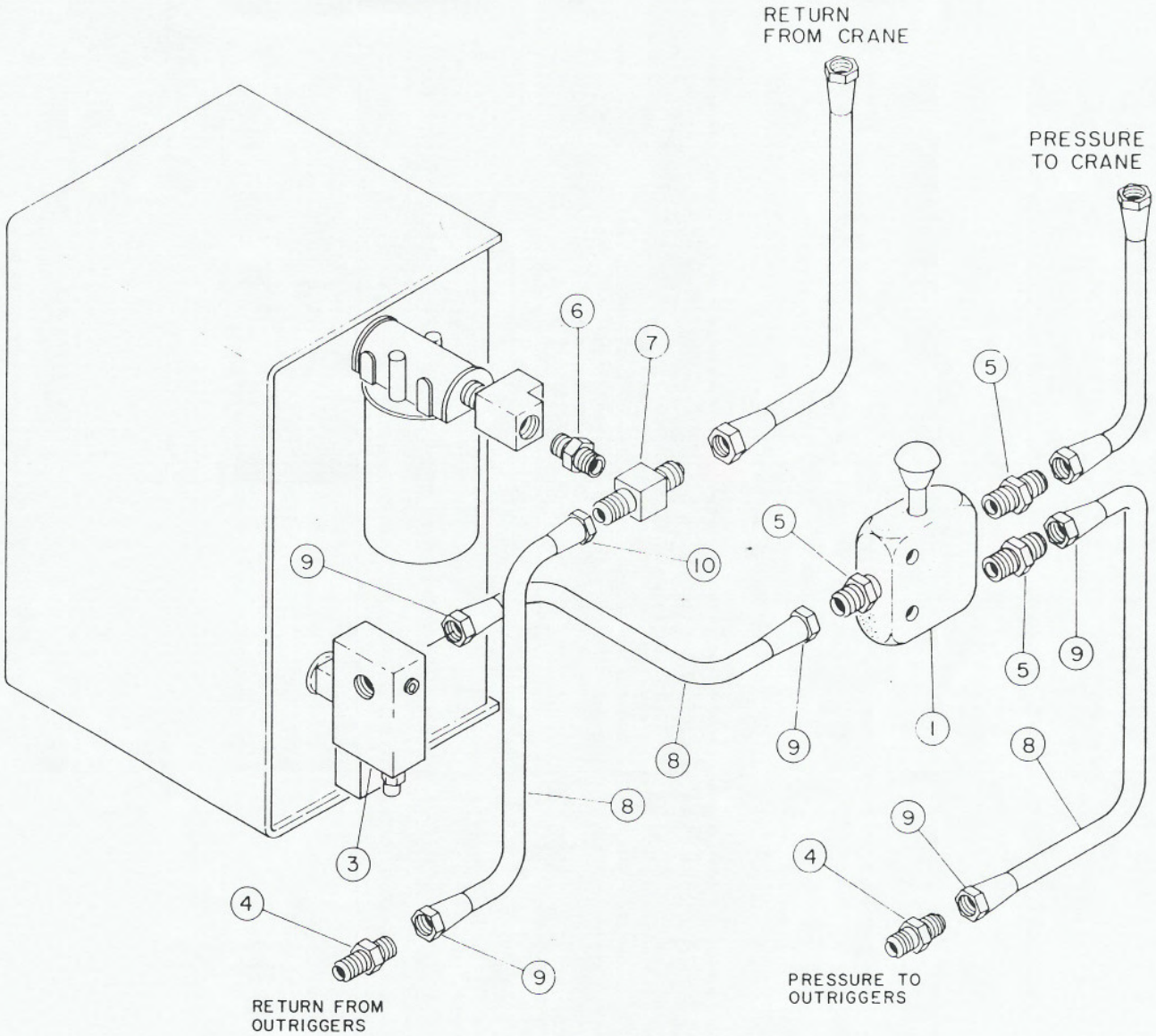

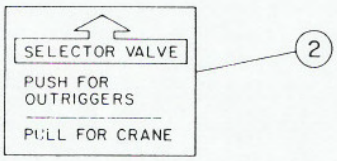

ITEM	QTY.	PART NO.	DESCRIPTION
1	1	480236	SELECTOR VALVE
2	1	750271	DECAL, SELECTOR VALVE
3	1	REF.	DUMP VALVE ASS'Y
4	2	REF.	ADAPTER ST. -8 JIC / -8 JIC
5	3	REF.	ADAPTER ST. -8 NPT / -8 JIC
6	1	REF.	ADAPTER ST. -8 NPT / -12 NPT
7	1	REF.	TEE, -10 JIC RUN / -8 NPT FEM.
8	12'	REF.	HOSE, -8
9	5	REF.	HOSE FITTING, -8 JIC / -8 HOSE
10	1	REF.	HOSE FITTING, -8 JIC / -10 HOSE

NOTES

1. ITEMS 4 THROUGH 10 MAY BE PURCHASED AS A KIT WITH PART NUMBER 480234.
2. FOR ADDITIONAL IMFORMATION, SEE AW-480150 AND 366212.

OUTRIGGER INSTALLATION KIT

PART NO. 480235

FIXTURE NO	FINISH NO

CHG LTR	REVISION DESCRIPTION	DATE	APP'D

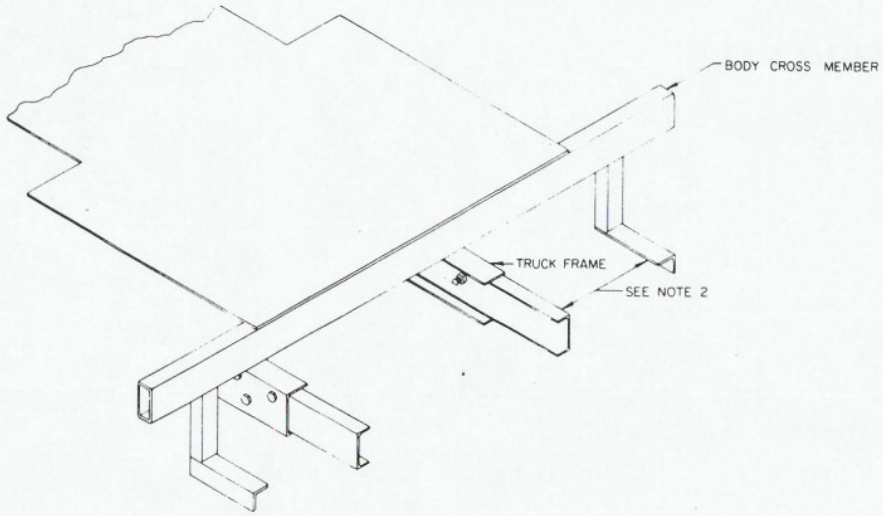

TYPICAL INSTALLATION

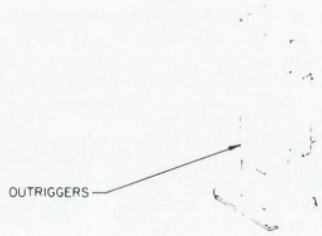

NOTES:

1. WELD MAIN CROSS TUBE TO FRAME EXTENSIONS AND CROSS MEMBER EXTENSIONS.
2. CAUTION: ON HYDRAULIC OUTRIGGERS (REF P/N-480170), POSITION SO THAT THE WELD OR BRACING DOES NOT INTERFERE WITH HYDRAULIC TUBING OR HOSE HOOK-UP.

ITEM	D S	PART NO	DESCRIPTION

QUANTITY — LIST OF MATERIAL

UNLESS OTHERWISE NOTED ALL DIMENSIONS ARE IN INCHES
TOLERANCES UNLESS OTHERWISE SPECIFIED
ANGLES ± 1.2° XX ± .40
FRACTIONAL ± 1/16 XXX ± .010
REMOVE ALL BURRS AND SHARP EDGES. DO NOT SCALE THIS DRAWING
TOLERANCES NOT SHOWN ABOVE ARE PER ANSI Y14.5 1973

THIS PRINT IS THE PROPERTY OF AUTO CRANE CO. AND MUST NOT BE USED IN ANY MANNER DETRIMENTAL TO THEIR INTERESTS

NEXT ASS'Y

DRAWN BY [illegible] DATE 12-11-84
CHK'D BY
DATE
ENG BY
DATE

AUTO CRANE COMPANY

TITLE: INSTALLATION - OUTRIGGERS 8005H

SCALE ~ | SIZE D | DRAWING NO AW-018 | REVISION

WEIGHT | SHEET 1 OF 1

7-6.0.0

FIXTURE NO	FINISH NO.

CHG LTR	REVISIONS DESCRIPTION	DATE	APP'D

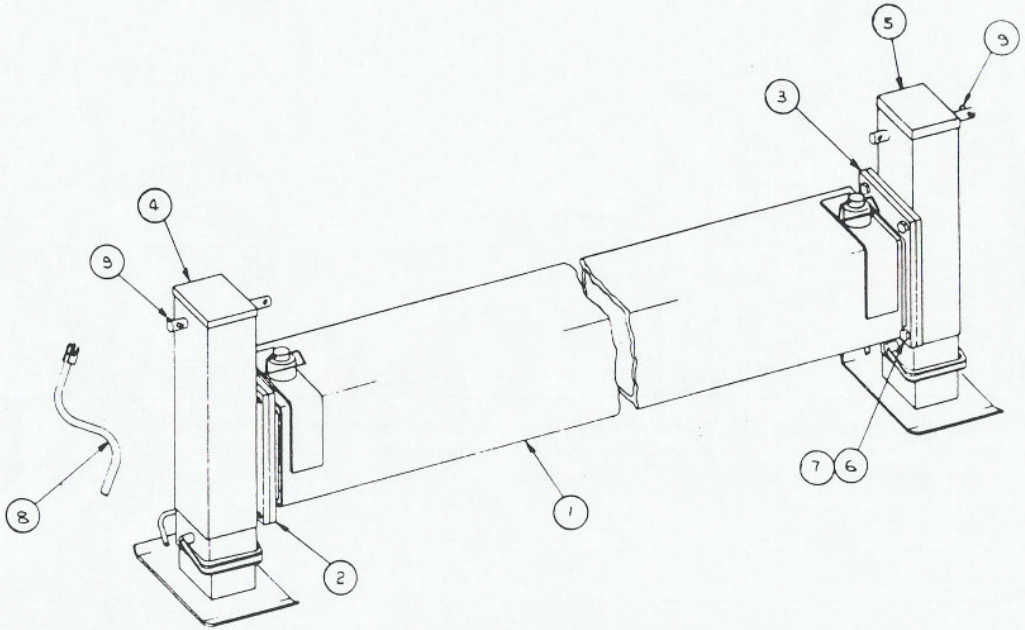

NOTE:
INSTALL ITEM 9 (PIN) WITH 1/2 INCH EACH SIDE OF CRANK SHAFT.

QUANTITY			ITEM	D'S	PART NO	DESCRIPTION
2			9	A	480162	PIN, ROLL 3/8 x 2" LG.
1			8	A	480164	HANDLE CRANK
8			7	A	023800	WASHER, SP LK 5/8
8			6	A	012203	SCREW HX HD 5/8 NF x 1 1/8" LG
1			5	B	480169	OUTRIGGER, MANUAL WELDMENT (R)
1			4	B	480168	OUTRIGGER, MANUAL WELDMENT (L)
1			3	B	750894	SLIDE, CURB SIDE
1			2	B	750893	SLIDE, STREET SIDE
1			1	B	750891	MAIN CROSS TUBE ASS'Y

LIST OF MATERIAL

UNLESS OTHERWISE NOTED ALL DIMENSIONS ARE IN INCHES
TOLERANCES UNLESS OTHERWISE SPECIFIED
ANGLES ± 1/2° | XX ± .
FRACTIONAL ± 1/16 | XXX ± .010
REMOVE ALL BURRS AND SHARP EDGES DO NOT SCALE THIS DRAWING
TOLERANCES NOT SHOWN ABOVE ARE PER ANSI Y14.5 1973

DRAWN BY RICKMAN
DATE 5-5-84
CHK'D BY
DATE
ENG BY
DATE

AUTO CRANE COMPANY
P.O. BOX 45548 • TULSA, OKLAHOMA 74145
9260 BROKEN ARROW EXPRESSWAY • 918 627 9475

TITLE
OUTRIGGER ASSEMBLY (MANUAL)

SCALE | SIZE C | DRAWING NO AW-480301 | REVISION –

WEIGHT | SHEET 1 OF 1

NEXT ASS'Y

THIS PRINT IS THE PROPERTY OF AUTO CRANE CO AND MUST NOT BE USED IN ANY MANNER DETRIMENTAL TO THEIR INTERESTS

7-7.0.0

FIXTURE NO.	FINISH NO.

CHG LTR	REVISIONS DESCRIPTION	DATE	APP'D

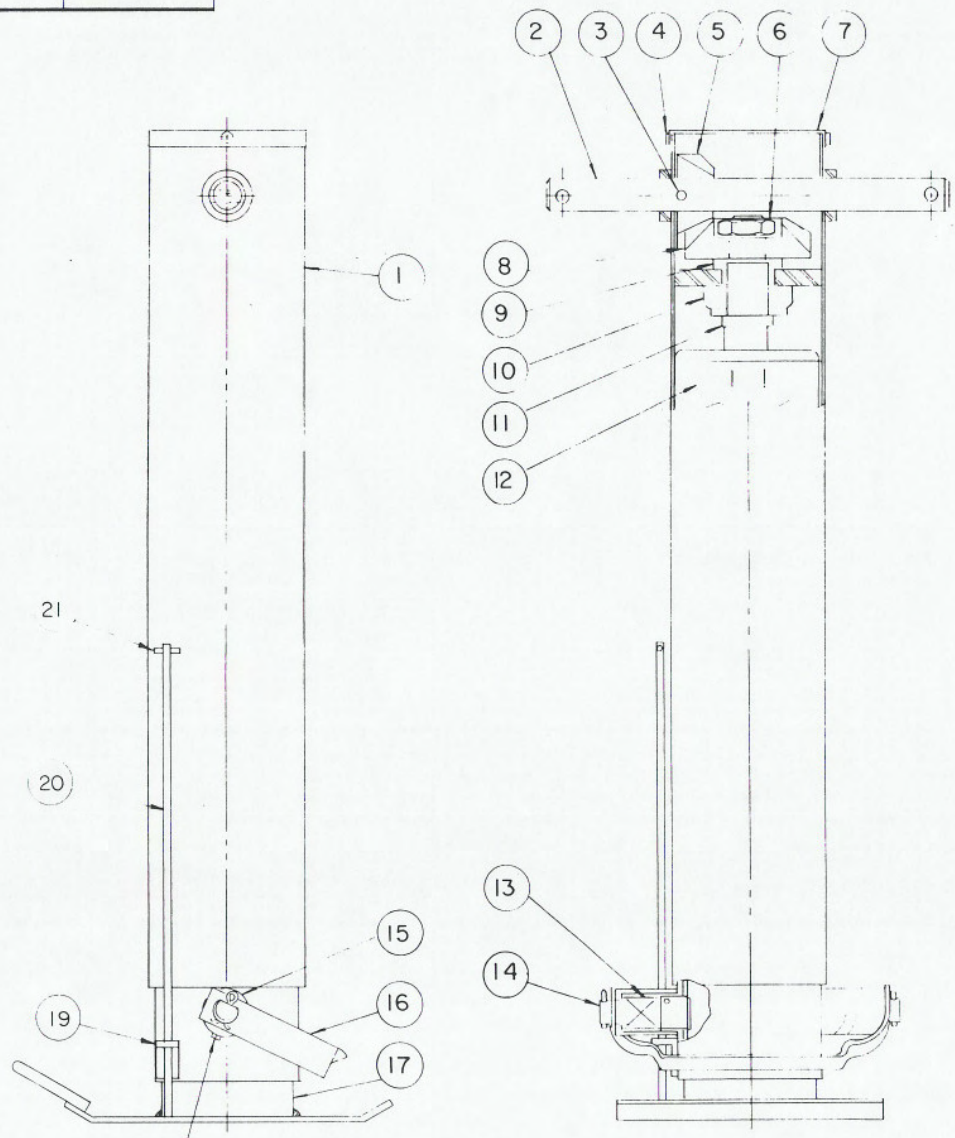

18 - INSERT ROLL PIN UNTIL FLUSH WITH OUTSIDE OF TUBE.

ITEM	QUANTITY	D'S	PART NO.	DESCRIPTION
1	21	A	022701	ROLL PIN 3/16" X 3/4" LG.
1	20	A	480149	RETAINER ROD
1	19	A	480148	ANGLE, BRACKET
2	18	A	480287	ROLL PIN
1	17	A	480286	DROP LEG S/A
1	16	A	480285	SHOT PIN HANDLE
2	15	A	480284	COTTER PIN
2	14	A	480283	SHOT PIN
2	13	A	480282	COMP SPRING
1	12	A	480281	INNER LEG S/A
1	11	A	480280	SPECIAL WASHER
1	10	A	480279	THRUST BEARING
1	9	A	480278	BUSHING
1	8	A	480277	BEVEL GEAR
1	7	A	480276	COVER
1	6	A	480275	JAM NUT
1	5	A	480274	BEVEL PINION GEAR
2	4	A	480273	SELF TAPPING SCR.
1	3	A	480272	SPIRAL PIN
1	2	A	480271	CRANK SHAFT
1	1	A	480270	OUTER LEG S/A

LIST OF MATERIAL

NEXT ASS'Y

UNLESS OTHERWISE NOTED ALL DIMENSIONS ARE IN INCHES.
TOLERANCES UNLESS OTHERWISE SPECIFIED
ANGLES ± 1/2° | XX ± .40
FRACTIONAL ± 1/16 | XXX ± .010
REMOVE ALL BURRS AND SHARP EDGES. DO NOT SCALE THIS DRAWING.
TOLERANCES NOT SHOWN ABOVE ARE PER ANSI Y14.5 1973

THIS PRINT IS THE PROPERTY OF AUTO CRANE CO. AND MUST NOT BE USED IN ANY MANNER DETRIMENTAL TO THEIR INTERESTS.

DRAWN BY G. Sussman
DATE 5-5-87
CHK'D BY
DATE
ENG. BY
DATE

AUTO CRANE COMPANY
P.O. BOX 45548 • TULSA, OKLAHOMA 74145
9260 BROKEN ARROW EXPRESSWAY • 918-627-9475

TITLE
OUTRIGGER, MANUAL

SCALE	SIZE	DRAWING NO.	REVISION
—	C	AW - 480166	—

WEIGHT

SHEET 2 OF 2

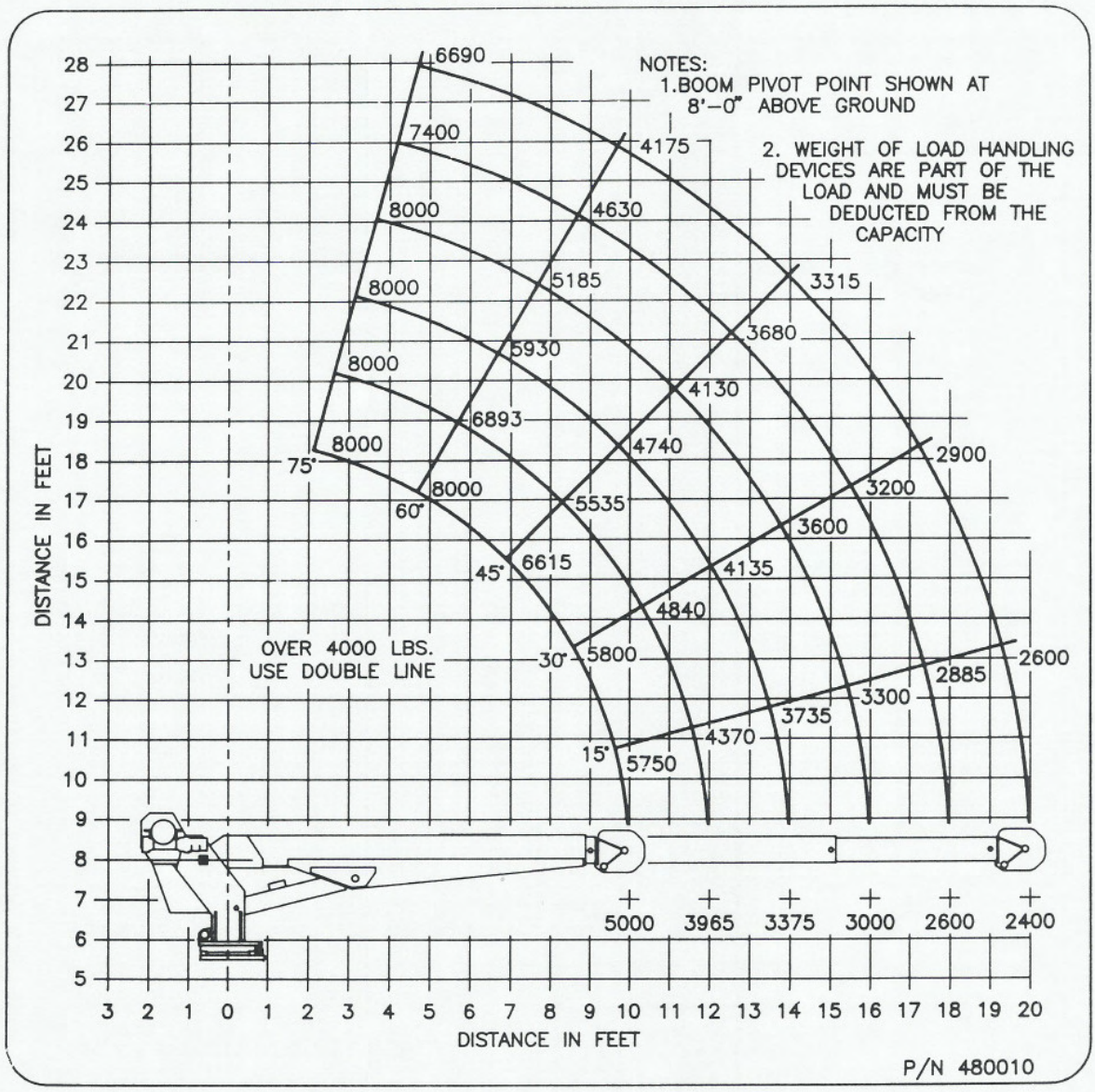

AW-480010
LOAD CHART

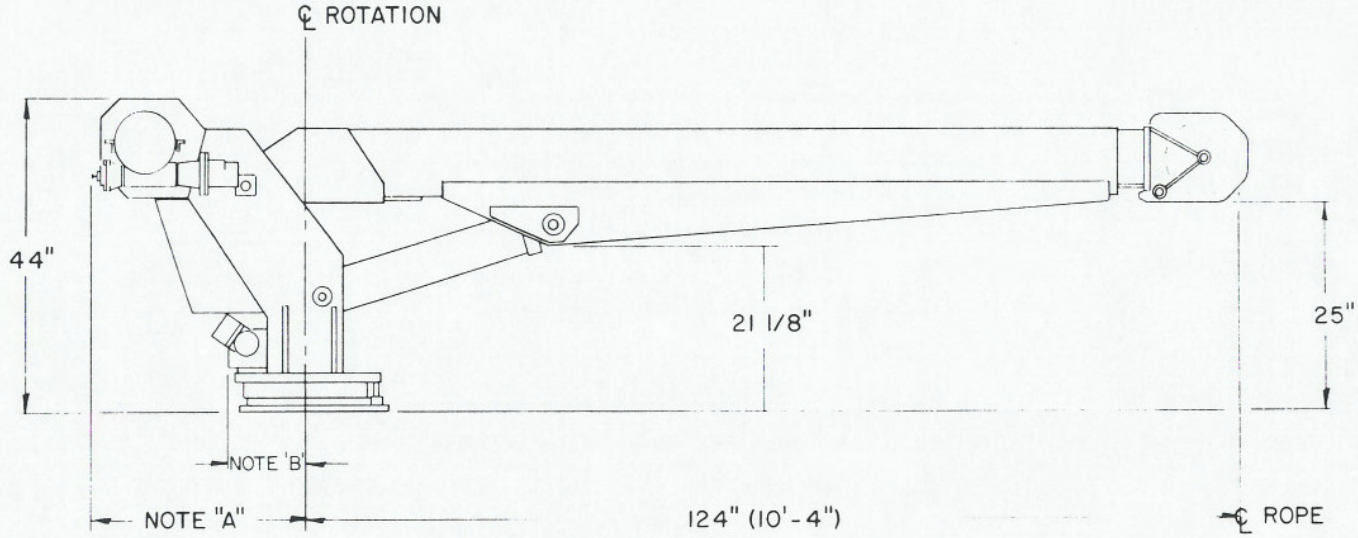

NOTE

A. MAX. TURNING RADIUS AT HOIST 26 5/8"

B. MAX. TURNING RADIUS AT SWING DRIVE 13 17/32"

SPECIFICATIONS

WEIGHT - 1500 LBS.

OPERATING PRESSURE - 2000 PSI

OIL FLOW - 8 GPM

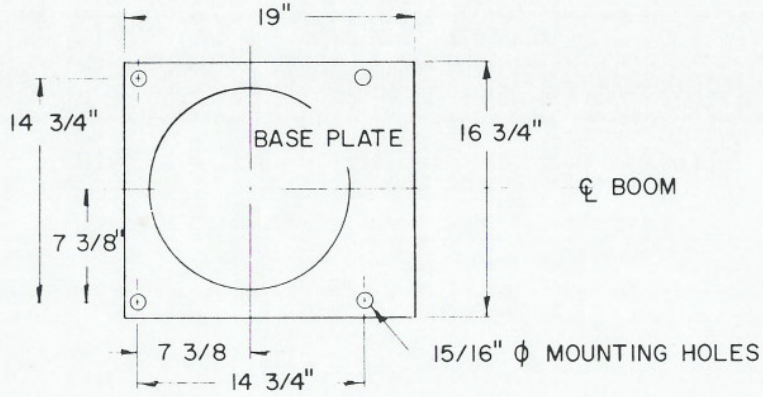

GENERAL DIMENSIONS, 8005H

AW-085

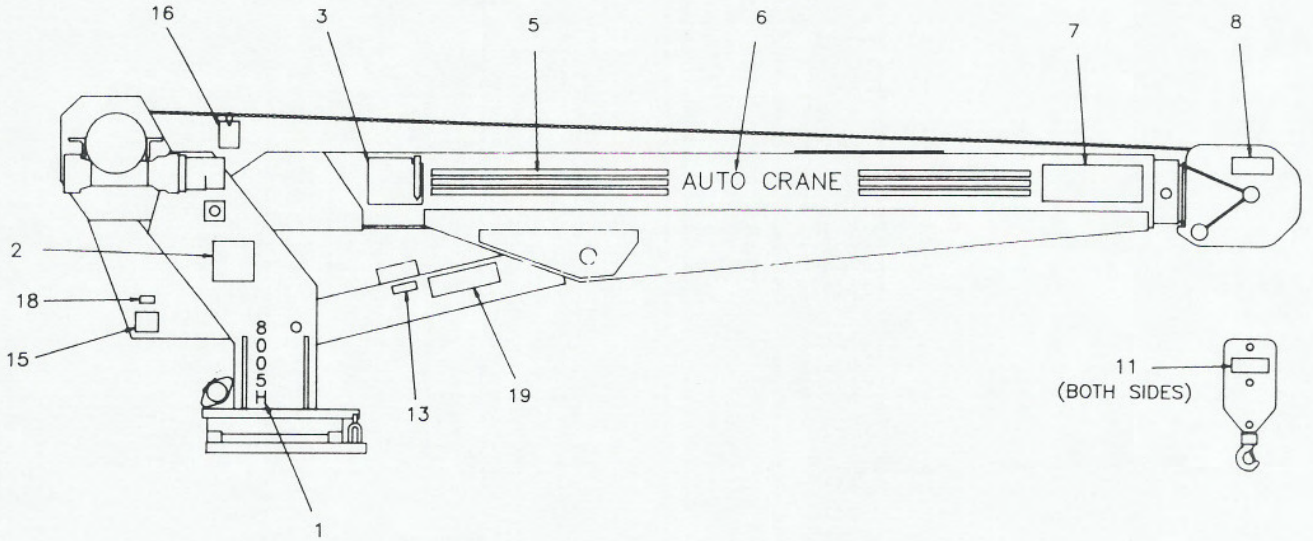

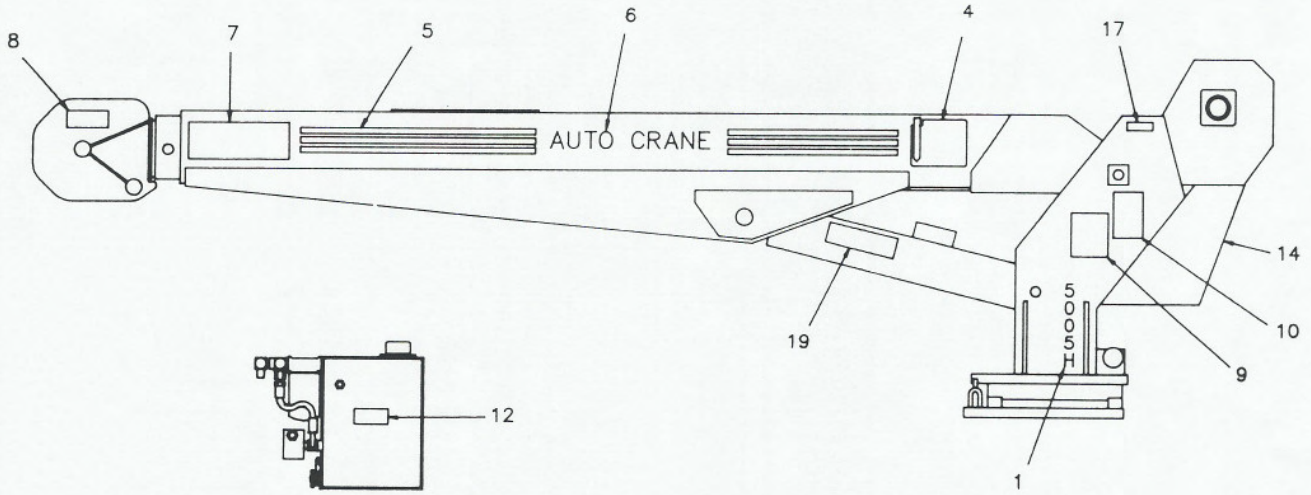

RESERVOIR

ITEM	QTY.	PART NO.	DESCRIPTION
1	2	480034	DECAL, 8005H
2	1	480010	LOAD CHART
3	1	480038	DECAL, ANGLE INDICATOR, RIGHT
4	1	480039	DECAL, ANGLE INDICATOR, LEFT
5	8'	040620	STRIPING
6	2	040624	DECAL, AUTO CRANE
7	2	040529	DECAL, DANGER ELECTRIC
8	2	040517	DECAL, STAY CLEAR OF BOOM
9	1	040580	DECAL, MUST NOT...
10	1	040579	DECAL, WORK RULES
11	2	040518	DECAL, STAY CLEAR OF LOAD
12	1	040634	CAUTION, 8 GPM
13	1	040587	DECAL, LOAD SENSOR
14	1	360034	DECAL, LOGO
15	1	040632	WARNING, CYLINDER IN OPP.
16	1	999944	INSTALLATION CHECKLIST
17	1	330622	DECAL, SERIAL NUMBER
18	1	330633	DECAL, OPTI-FLOW
19	2	040519	DECAL, DANGER, SCISSOR POINT...

AW-480021
DECAL LAYOUT, 8005H

FIXTURE NO	FINISH NO

CHG LTR	REVISIONS DESCRIPTION	DATE	APP'D

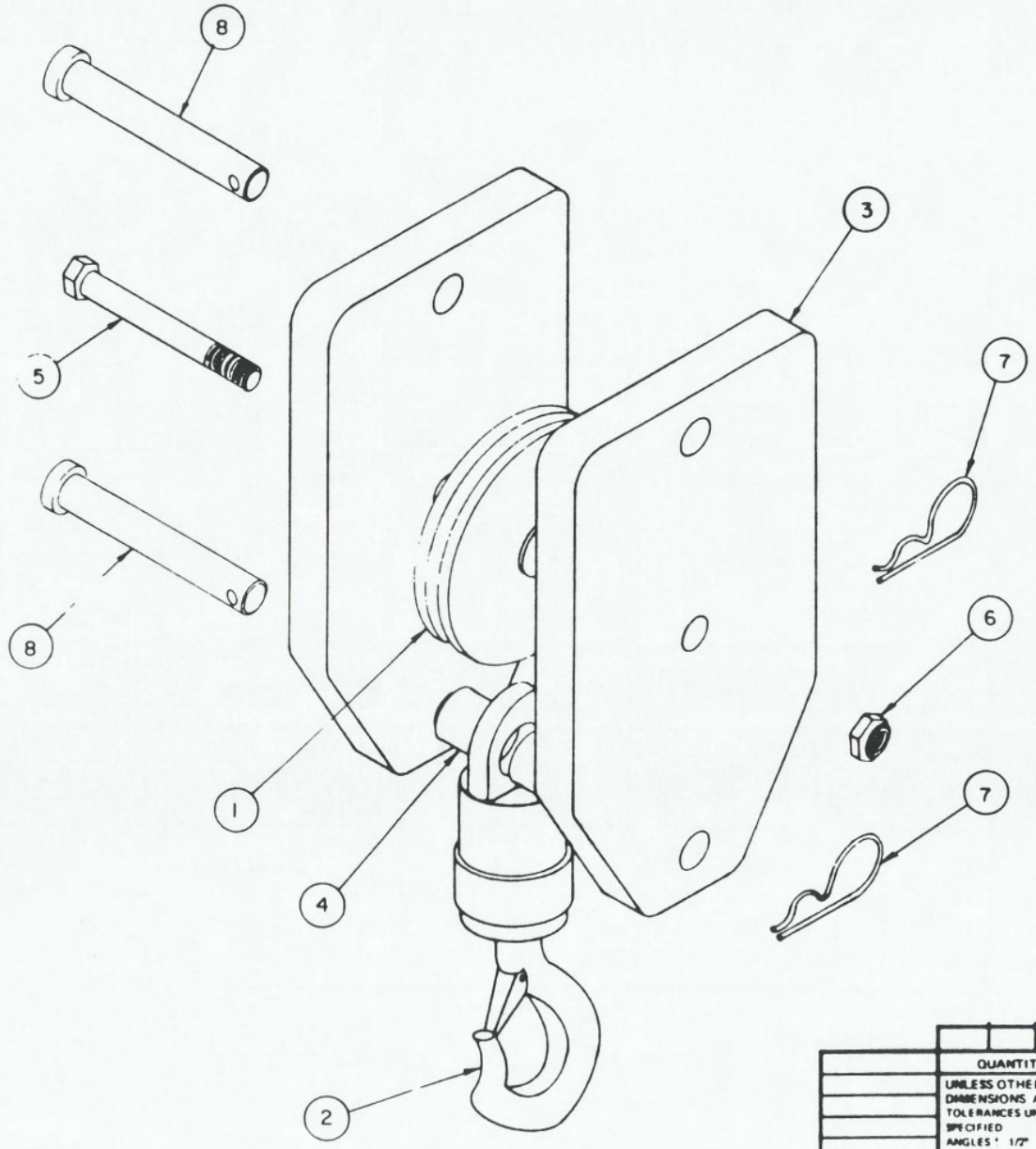

NOTE:
ITEM 1, BEARING P/N 240234

ITEM	D/S		PART NO	DESCRIPTION
8	2	B	360605	PIN, BLOCK
7	2	A	360124	PIN, HITCH
6	1	A	017800	NUT, HEX-LOCK 1/2 - 20
5	1	A	006801	SCREW, HEX - HD 1/2 - 20 X 4" LG.
4	1	A	240237	SPACER, BUSHING 1" O.D.
3	2	C	360601	BLOCK SIDE PLATE
2	1	A	480026	HOOK, SWIVEL
1	1	B	480130	SHEAVE ASSEMBLY

QUANTITY — LIST OF MATERIAL

NEXT ASS'Y

UNLESS OTHERWISE NOTED ALL DIMENSIONS ARE IN INCHES
TOLERANCES UNLESS OTHERWISE SPECIFIED
ANGLES ± 1/2° | XX ± .40
FRACTIONAL ± 1/16 | XXX ± .010
REMOVE ALL BURRS AND SHARP EDGES. DO NOT SCALE THIS DRAWING
TOLERANCES NOT SHOWN ABOVE ARE PER ANSI Y14.5 1973

THIS PRINT IS THE PROPERTY OF AUTO CRANE CO AND MUST NOT BE USED IN ANY MANNER DETRIMENTAL TO THEIR INTERESTS

DRAWN BY MKK
DATE 9-30-85
CHK'D BY
DATE
ENG BY
DATE

AUTO CRANE COMPANY

TITLE
TRAVELING BLOCK ASSEMBLY
8005H

SCALE	SIZE	DRAWING NO	REVISION
~	C	AW-360603	

WEIGHT — SHEET 1 OF 1

3/89

AUTO CRANE COMPANY

P. O. BOX 581510 • TULSA, OKLAHOMA 74158

Limited Warranty

Auto Crane will warranty to consumer for a period of twelve months from date of purchase that each new Auto Crane product it sells will be free under normal use and service, from defects in material and workmanship. Date of purchase will be honored as either date of purchase by distributor or his date of sale of the product as substantiated by Distributor Delivery Report.

Obligation of Auto Crane under this warranty is limited to replacement or repair of parts that appear to manufacturer after review and/ or inspection to be defective. This warranty does does not obligate Auto Crane to bear the cost of labor or transportation charges in connection with the replacement or repair of defective parts. Responsibility for customer's claims arising from misapplication, abuse, misuse or alteration of equipment or parts lies with the distributor or user and no warranty obligation is assumed in the circumstances by Auto Crane.

Auto Crane will in no event be liable for any consequential damages or contingent liabilities arising out of the failure of any Auto Crane product or parts to operate properly.

Auto Crane makes no warranty in respect to component accessories, same being subject to the warranties of their respective manufacturers.

If field service, at the request of buyer, is rendered and fault is found not to be with Auto Crane's product, the buyer shall pay the time and expense of the field representative. Claims for service labor or other expenses that have been incurred by the buyer without approval or authorization of Auto Crane will not be accepted.

AUTO CRANE COMPANY IS UNDER NO OBLIGATION TO EXTEND THIS WARRANTY TO ANY CUSTOMER FOR WHICH AN AUTO CRANE WARRANTY REGISTRATION CARD HAS NOT BEEN COMPLETED AND MAILED TO AUTO CRANE COMPANY WITHIN FIFTEEN (15) DAYS AFTER DATE OF PURCHASE.

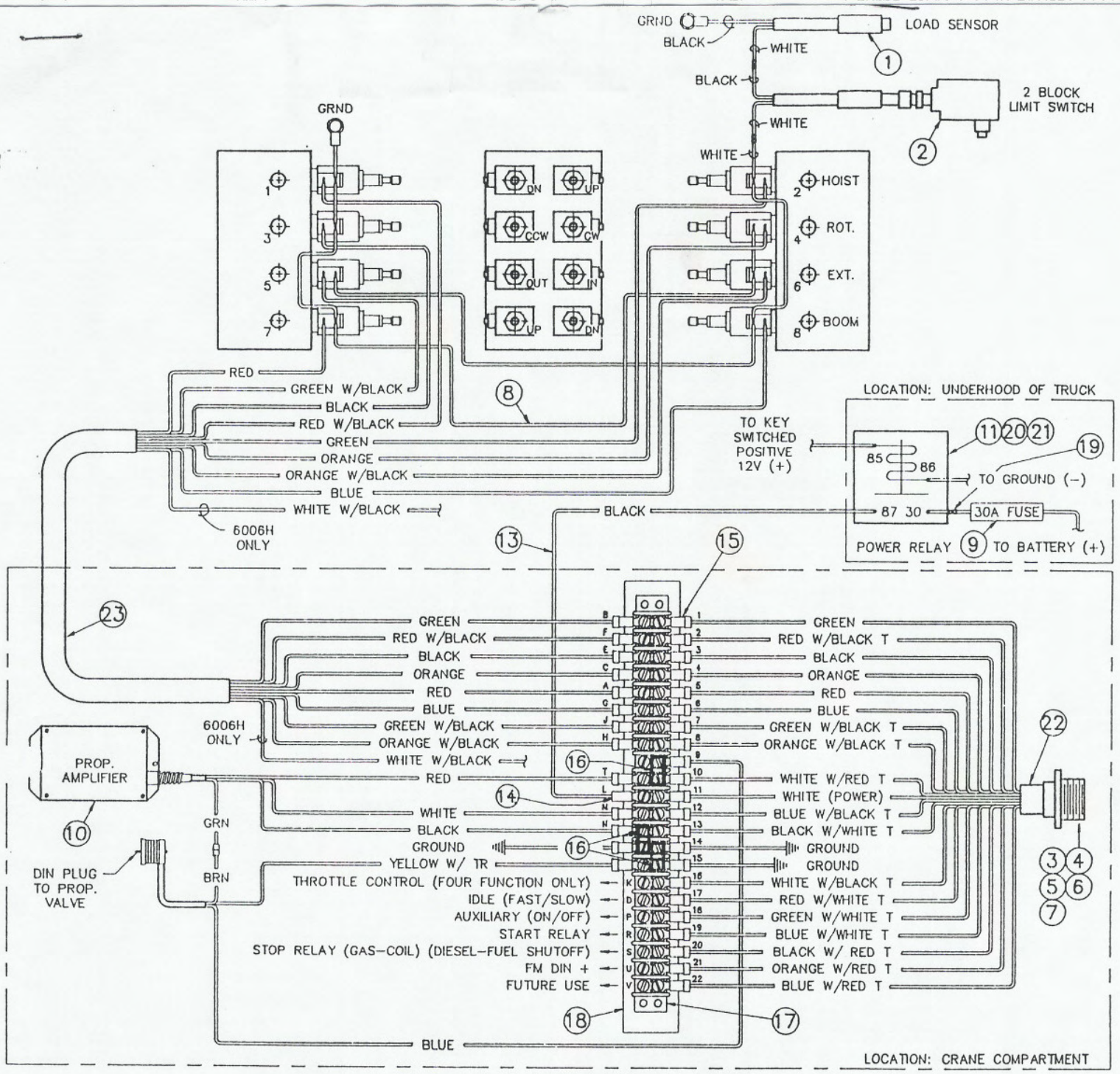

ITEM	QTY	PART NO.	DESCRIPTION
1	1	480098	LOAD SENSOR ASSY
2	1	364006	2-BLOCK SWITCH ASSY
3	1	480626	BRACKET, PENDANT (19 PIN)
4	1	480547	CAP, PENDANT RECEPTACLE
5	2	000404	SCREW, #6-32 X 5/8" LG.
6	2	019600	WASHER, SP LK #6
7	2	015400	NUT, HX #6-32
8	1	480099	CONDUCTOR ASSY (POWER EXT.)
9	1	750167	FUSE, IN-LINE 30 AMP
10	1	480522	AMPLIFIER ASSY
11	1	320355	POWER RELAY

ITEM	QTY	PART NO.	DESCRIPTION
12	1	480549	CONDUCTOR, 16 Ga BLACK
13	1	800657-009	CONDUCTOR, POWER
14	1	001002	TERMINAL, RING
15	35	480495	TERMINAL, FLG'D SPADE (16-14 WIRE)
16	3	636600	JUMPER
17	1	480494	TERMINAL BLOCK, 22 STA
18	1	480490	DECAL, 22 STA TERMINAL BLOCK
19	2	001102	TERMINAL, WR 2RC-10
20	1	320363	PLUG, RELAY
21	5	320357	CONNECTOR, SPD LOCKING, NON-INS
* 22	1	480491	HARNESS ASSY
23	1	480492	HARNESS, CRANE PIGTAIL

AW-144 (591)

CRANE WIRING 8005H

W/ 4 & 8 FUNCTION PENDANTS PROP. IC

* NOTE: ITEM 22 INCLUDES ITEMS 15, 16 & 17